DC1500, DC3100, DC3200, DC5550, DC7800

OWNER'S MANUAL

WARNING..Read all instructions carefully before assembling components and operating sprayer. Incorrect procedure could result in damage to the unit, severe personal injury and/or property damage. When spraying flammable materials, sprayer must be placed at least 20 feet from target in a well-ventilated area. Vapours can be ignited by static discharge or electrical sparks and result in severe personal injury. LEMMER airless sprayers generate high fluid pressure. Improper use could result in an injection injury.

LEMMER

CALGARY • TORONTO • MONTRÉAL

TABLE OF CONTENTS

SAFETY PRECAUTIONS

WARNING

1) **Injection hazard**: Airless Painting Equipment can cause serious injury if the spray penetrates the skin. Do not point the gun at anyone or any part of the body. The tip guard provides some protection against accidental injection injuries, but is mostly a warning device. Never put your hand, fingers or body over the spray tip. Gloves and clothing do not necessarily offer any protection either. Keep the gun trigger safety lever in locked postion when not spraying. Always have the tip guard in place while spraying.
In case of penetration seek medical aid immediately! Note to physician: Injection into skin is a serious traumatic injury. It is important to treat the injury surgically as soon as possible. Do not delay treatment to research toxicity. Toxicity is a concern with some exotic coatings injected into the bloodstream. Consultation with a plastic surgeon or reconstructive hand surgeon may be advisable. Be prepared to tell the doctor what fluid was injected.
2) **This system is capable of producing 3200 PSI**. To avoid rupture and injury, do not operate this pump with components rated less than 3200 PSI working pressure (including but not limited to spray guns, hose and hose connections).
3) **Do not spray** paints or other **inflammable fluids indoors** which have a flash point below 21 degree C, 70 degree F. Keep spray area well ventilated. Before spraying, turn off all pilot lights and open flames.
4) **Wear a respirator** which is approved for the product being sprayed.
5) **Do not use halogenated hydrocarbon solvents** in this system; it contains aluminium parts and may explode. Cleaning agents, coatings, paints, and adhesives may contain halogenated hydrocarbon solvents. Don't take chances, consult your material supplier to be sure. (ex: methylene chloride and 1,1,1 - Trichlorethane)
6) **Caution**: When a flammable liquid is sprayed there may be **danger of fire or explosion** especially **in a closed area.**
7) **Caution: Arcing parts.** Keep the pump at least 20 feet away from explosive vapors.
8) **Caution: Static electricity** can be developed by airless spraying. Ground unit and object to be sprayed. On electric units, unit power cord must be connected to a grounded outlet. Use only three wire extension cords. Static explosion can occur with ungrounded unit.
9) **Flush system with spray tip removed.** Always use lowest pressure possible.
10) Always **follow safety precautions** and warnings printed **on paint container.**
11) Only **use spray guns and hoses supplied by Lemmer.** User assumes all risk and liability when using spray guns or hoses not complying with minimum specification and safety devices of Lemmer Spray Systems Ltd.
12) **Inspect hoses** before each use. Never use a damaged hose. High pressure in hoses with wear, leaks or splits may cause the hose to rupture and cause serious personal injury. Never try to stop or deflect leaks with any part of your body.
13) **Use extreme caution when cleaning spray tip guard. DO NOT** try to wipe off build up around the spray tip before following shut down procedure. Follow the Shut down Procedure, then follow the spray tip manufacturer's instructions for removing and cleaning the spray tip.
14) **Never** attempt to change spray tip or leave the unit unattended without first shutting off pump, releasing fluid pressure, and locking the trigger safety lock.
15) **Use extreme caution when changing spray tip.** Follow the Shut down Procedure, then follow the spray tip manufacturer's instructions for changing the spray tip.

ATTENTION

1) **Risque d'injection** de peinture: Le matériel de pulvérisation sans air peut entraîner de graves blessures s'il y a pénétration de la peau par la peinture. Ne jamais pointer le pistolet vers une personne ou vers soi-même. La garde de la buse limite le risque de blessures accidentelles par injection mais constitue principalement un élément de mise-en-garde. Ne jamais mettre la main, les doigts ou toutes parties du corps contre la buse. Le port de gants et de vêtements n'est pas nécessairement une forme de protection non plus.Laisser le cran de sureté du pistolet en position fermée quand il nést pas utilisé. Toujours avoir la garde en place pour peindre.
En cas d'accident, demander immédiatement des soins médicaux. Note au médicin: La pénétration de peinture dans la peau peut causer de graves blessures. Il est important de traîter la blessure à la chirurgie aussitôt possible. Ne pas retarder le traitement pour rechercher la toxicité. La toxicité peut avoir de graves conséquences quand certains enduits exotiques son injectés directement dans le systéme sanguin. Une consultation avec un chirurgien spécialisant en reconstruction de mains serait conseillable. Soyez prêts à décrire au médecin quel liquide a été injecté.
2) **Ce matériel peut produire une pression de 3200 lbf/po2**. Afin d'éviter des ruptures et des blessures, ne pas utiliser cette pompe avec des éléments dont la pression nominale de service est inférieure à 3200 lbf/po2 (y compris les pulvérisateurs, tuyaux flexibles et raccords).
3) **Ne jamai**s **pulvériser à l'interieur un produit inflammable** qui a un point éclair inférieur à 21 degrés C,70 degrés F. L'endroit où vous peinturez doit toujours être bien aéré. Avant de pulvériser s'assurer qu'il n'y a aucune flamme ou pilot (veilleuse) de fournaise en marche dans l'appartement.
4) **Servez-vous d'un masque respiratoire** qui est certifié pour le produit que vous pulvérisez.
5) **Ne pas utiliser de solvants contenant des hydrocarbures halogénés** avec ce matériel. Il contient des particules d'aluminium et peut exploser. Les agents de nettoyage, enduits, peintures et, adhésifs, peuvent contenir des solvants contenant des hydrocarbures halogénés. Soyez prudents; consultez votre fournisseur pour les informations nécessaires. (ex: méthylène chloride and 1,1,1 - Trichloréthane)
6) **Attention**: La pulvérisaton d'un liquide inflammable **peut entraîner un risque d'incendie ou d'explosion, surtout dans les espaces fermés.**
7) **Attention: Étincelles électriques.** Ne pas placer la pompe à moins de 6 mètres des vapeurs explosives.
8) **Attention**: La pression du produit que l'on pulvérise peut produire une **charge électrostatique**. Mettre le matériel et l'objet à pulvériser à la terre. Sur les modèles électriques, le cordon électrique doit être attaché à une prise de courrant reliée à terre. Le cordon de rallonge doit être à 3 fils. Des décharges d'électricité statique peuvent se produire si le matériel n'est pas mis à la terre.
9) **Retirer l'embout de pulvérisation avant de rincer le matériel** tout en utilisant une pression aussi basse que possible.
10) **Toujours prendre les précautions** nécessaires et observer toutes les consignes de sécurité figurant sur le **pot de peinture.**
11) **N'utiliser que les pulvérisateurs et les tuyaux flexibles fournis par Lemmer.** Les personnes qui utilisent des pulvérisateurs et des tuyaux flexibles non conformes aux standards d'utilisation et de sécurité minimum du fabricant de la pompe le font à leurs propres risques et seront les seuls responsables.
12) **Examiner soigneusement** le tuyau avant de s'en servir. Il ne faut jamais utiliser un tuyau endommagé ou avec des fentes. Un tuyau à haute pression qui n'est pas en bon état représente un serieux danger de blessure à la personne en cas de crevaison soudaine. Il ne faut jamais essayer d'arrêter des fuites de liquide avec n'importe quelle partie de votre corps.
13) **Il est nécessaire d'exercer beaucoup de précaution pendant le nettoyage de la protection de la buse. Ne jamais** essayer d'enlever la peinture qui aurait pu s'accumuler sur la buse avant d'avoir suivi les consignes de sécurité concernant le nettoyage et le remplacement de la buse.
14) **Ne jam**ais essayer de changer la buse ou laisser l'appareil sans surveillance avant d'arrêter le moteur, couper la pression et verrouiller la gâchette du pistolet.
15) **Le remplacement d'une buse doit être fait avec beaucoup de précaution**. Référez-vous au PROCÉDÉ D'ENTRETIEN.

SAFETY PRECAUTIONS

16) Do not pull on hoses to move equipment, **DO NOT kink or bend** the hose sharply.

17) Keep children or anyone not familiar with airless spray systems **away** from equipment and work area.

18) Conductive metal containers must be used when flushing flammable fluids through the system. Always flush at low pressure with spray tip removed. A metal part of the spray gun must be held firmly against the grounded metal pail when flushing or relieving pressure from the gun.

19) Trigger guard helps reduce the risk of accidentally triggering the gun if dropped or bumped. **Do not use a spray gun without a trigger guard.**

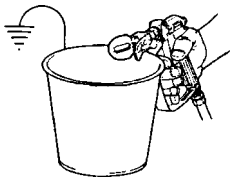

16) Il ne faut jamais essayer de déplacer l'appareil en tirant sur le tuyau. Il faut aussi éviter tout tortillement du tuyau.

17) Les enfants et le personnes n'ayant aucune expérience avec ce genre de pulvérisateur doivent êtres gardés à l'écart de l'appareil et du chantier de travail.

18) Quand on décharge des liquides inflammables il faut utiliser des pots conducteurs en métal. Quand on relâche la pression avec le pistolet, une partie métallique du pistolet doit être en contact avec le pot en métal muni de mise à la terre.

19) La protection de la gâchette réduit le risque d'activement involontaire si on laisse tomber le pistolet ou s'il est frappé par accident. **Ne jamais utiliser le pistolet sans la protection de gâchette**.

20) Shut Down Procedure
Always follow Shut Down Procedure before starting any troubleshooting, servicing or cleaning.
1) Engage the trigger safety lock in the locked position. Test the trigger safety lock to ensure the lock is working properly.
2) Turn the On/Off switch to the Off position.
3) Unplug the electrical cord on the sprayer.
4) Open the prime valve to relieve pressure. Leave open until ready to spray or test or clean.
5) Remove the spray tip.
6) Disengage the trigger safety lock.
7) Trigger the gun into a metal pail to relieve any remaining pressure. A metal part of the spray gun should be held firmly against the grounded metal pail when relieving the pressure from the gun. (A grounded metal pail is not required for non-flammables such as latex.)
8) Reset the trigger safety lock to locked position.

20) Procédé à suivre avant tout travail d'entretien ou de nettoyage.
1) Bloquer la gâchette avec le levier de verrouillage.
2) Placer l'interrupteur MARCHE-ARRÊT en position ARRÊT.
3) Débrancher le cordon électrique.
4) Ouvrir la vanne de mise à l'air libre pour relâcher la pression. Gardez-la ouverte jusqu'au moment où vous êtes prêts à utiliser l'appareil.
5) Enlever la buse.
6) Débloquer le levier de verrouillage de la gâchette.
7) Relâcher le reste de la pression en déchargeant avec le pistolet dans un pot en métal. Quand on relâche la pression, une partie métallique du pistolet doit être en contact avec le pot en métal muni de mise à la terre. (Il n'est pas nécessaire d'utiliser un pot avec mise à la terre pour des produits non inflammables, comme par exemple le latex).
8) Ramener le levier de verrouillage en position bloquée.

Warning

This unit is provided with a thermally protected Reset. If an overload occurs, the thermally protected automatic reset disconnects the motor from the power supply.
• Always disconnect motor from power supply before working on equipment.
• When thermally protected reset disconnects the motor from the power supply, relieve pressure by turning priming valve to “prime”.
• Turn ON-OFF switch to OFF.
Caution: The cause of the overload should be corrected before restarting.
Important: Read and understand these special safety precautions before operating the unit.

Avertissement

Cet appariel est équipé d'un disjoncteur à Protection thermique. En cas de surcharge, le disjoncteur automatique coupe le moteur de la source d'alimentation.
• Toujours déconnecter le moteur de la source d’alimentation avant de travailler sur l’appareil.
• Lorsque le disjoncteur coupe le moteur de la source d’alimentation relâcher la pression en plaçant le clapet d’amorçage en position “amorçage”.
• Placer l’interrupteur MARCHE-ARRÊT en position ARRÊT.
Attention: La cause de la surcharge doit être eliminée avant de remettre le moteur en marche.

Electrical requirements
If an extension cord is used, make sure it is a 3 conductor type (has grounding wire) and is CSA approved.Also make sure that its wire size (AWG) is thick enough to carry the amperage your machine requires. The chart below will show the minimum recommended AWG for specific lengths. See next page for pump specifications.

Remember; keep the motor clean and dry. Paint acts as an insulator and will cause overheating and/or motor damage.

Do not remove or bend grounding pin under any circumstances, it is essential for safe operation.

Données électriques.
Si l'on utilise un cordon de rallonge, veillez à ce qu'il soit à 3 fils (avec mise à la terre) et avec certification CSA. Le calibre des fils doit être suffisant pour l'ampérage qui est nécessaire pour que l'appareil fonctionne. Voir le tableau ci-dessous indiquant les calibres minimuns requis selon les différentes longueurs de la rallonge.

Il est important de garder le moteur propre et à l'abri de l'humidité. L'isolation créée par la peinture sèche pourrait le surchauffer et l'endommager.

Ne jamais enlever la broche de la mise à la terre car elle est essentielle pour la slûreté du travail.

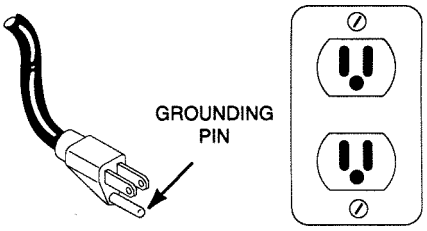

Cord	Motor Amperage Rating															
Length	0-5	6	7	8	9	10	11	12	13	14	15	16	17	18	19	20
25 ft	16	16	16	16	16	16	14	14	14	12	12	12	12	12	12	12
50 ft	16	16	16	16	16	16	14	14	14	12	12	12	12	12	12	12
75 ft	16	16	16	16	16	16	14	14	14	12	12	12	12	12	12	12
100 ft	16	16	16	14	14	14	14	14	12	12	12	12	12	12	12	12
125 ft	16	16	14	14	14	12	12	12	12	12	12	12	12	12	12	12
150 ft	16	14	14	14	12	12	12	12	12	12	12	12	12	12	12	12

Minimum recommended AWG

PRODUCT SPECIFICATIONS

INTRODUCTION:
We appreciate your decision to purchase a Lemmer professional quality professional paint spraying system and believe you will find it to be the best sprayer you ever owned.
Your Lemmer airless paint machine is capable of spraying a wide variety of latex, oil-based and alkyd paints, as well as stains, preservatives and other architectural coatings. The material you are spraying will have a direct effect on the amount of pressure required for the optimum pattern and coverage to be obtained. We recommend that before actually beginning your job, you carefully read this manual and practice with the sprayer until you feel comfortable using it.
These Lemmer sprayers are powerful and versatile enough to be used with a variety of accessories (extra lenghts of hose, extensions, pressure feed rollers, etc. as shown later in this manual) to make them even more versatile systems. Ask your supplier about the recommended accessories for your particular job.

PUMP TYPE:
The Lemmer DC units use a double acting piston pump, with stationary packings (DC1500 is single action, do not use with solvents stronger than varsol). This gives good service life and is a simple to maintain system. The valves are stainless steel balls with tungsten carbide seats, giving very good reliability.
Industrial grade DC motors are used in conjunction with reliable pressure control sytems.

ADVANTAGES OF THESE SYSTEMS ARE:
- Pump stops working when you do. Minimizes wear.
- Accurate spray pattern with minimal overspray.
- Minimal or no thinning of paint products.
- Pumps straight out of original paint container.
- Variable pressure from 0 to 3000 PSI.
- Various nozzles are available for slow to fast spraying.
- Light weight, compact and portable.
- Quiet running and low power consumption.
- Steady spraying pressure - minimal fan fluctuations.
- Compact paint pump - quick cleaning, less parts to wear.

IMPORTANT NOTICES:
Due to the nature of operation of this unit, even though the motor cuts off, or appears to have cut off, it may re-start at any time. Even once the switch has been turned off, there will likely be pressure remaining in the system. Do not service the unit unless it has been turned off, unplugged and the pressure has been relieved. Pressure is relieved by turning the prime knob counter clockwise and double checking by triggering the gun.

DO NOT USE STEEL BRAID paint spray hose! The DC-1500/5550/7800 can only be used with fibre braid hose.

TECHNICAL SPECIFICATIONS

	DC-1500	DC-5300	DC-5550	DC-7800
Weight:	15.5 lbs (7 kg) w/ght	40 lbs (16 kg)	74 lbs	87 lbs
Capacity, volume @ 2000 psi:	.25 gpm	.48 gpm	.55 gpm	1.0 gpm
Maximum tip size, 1 gun:	.015 (.015 installed)	.023 (.021 installed)	.025 (.023 installed)	.031 (.029 installed)
Maximum tip size, 2 gun:		.015 (.013 installed)	.017 (.015 installed)	.021 (.019 installed)
Motor:	1/2 hp ac	7/8 hp dc industrial TE	7/8 hp dc industrial	2.3 hp PMDC industrial
Power requirements, 110V:	9.0A,115VAC,60HZ	10.5A,115VAC,60HZ	12A,115VAC,60HZ	12.7A,115VAC,60HZ
Spraying pressure:	0 - 2800 psi	0 - 3000 psi	0 - 3000 psi	0 - 3300 psi
Maximum hose length:	100 feet (30.5meters)	300 feet (91meters)	300 feet (91meters)	300 feet (91meters)
Maximum power cord:	100 feet (14-16 guage)	300 feet (14-16 guage)	300 feet (12-14 guage)	300 feet (12-14 guage)
Paint inlet:	spl metric	swivel	swivel	
Paint outlet:	1/4" npt(m)	1/4" npt(m)	1/4" npt(m)	1/4" npt(m)
Wetted parts:	Al,Cu,SS,Tc,Tef,Lea,Brass,Nylon	Al,SS,Tc,Tef,Nylon,Zin,Nic,PTFE,Ace,Lea	Al,SS,Tc,Tef,Nylon,Zin,Nic,PTFE,Ace,Lea	Al,Cu,SS,Tc,Tef,Lea,Brass,Nylon,Chrome,Zinc

Capability: All conventional coatings, ie: latex, stain, lacquer (not DC1500), varnish, ink, primer, preservatives and many other architectural coatings, and with the DC-7800 also heavier coatings such as block filler and some elastomerics and glues.

PUMP COMPONENTS

SPRAY GUN:
The spray gun is designed specifically for airless spraying. Since there is no compressed air to atomize the paint, atomization is accomplished by forcing the paint at a very high pressure (3200 psi) through a very small hole (.017" diameter for example). Because of this high pressure, the spray tip and gun valve are made of tungsten carbide for maximum wear resistance. The gun body is made of forged alloy and anodized for chemical resistance.
As a safety feature, the spray gun can be locked with the trigger safety lever when you are not spraying. Be sure to read all warnings concerning the high pressures of airless spraying on page 3 & 4.

Important
To engage trigger safety lock, turn lever tab to horizontal position. Test regularily for proper functioning while system is shut down.

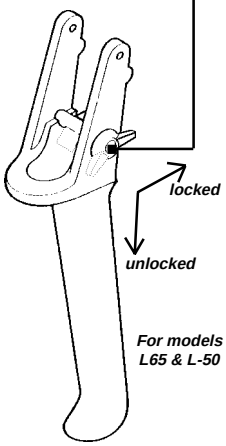

(trigger shown in horizontal locked position)

PISTON PUMP (DC-1600/3100/5300/5500/7700):
Uses two sets of packings and two check valves in conjunction with an abrasion resistant piston. This forms a double acting pump; ie pumps on both up and down stroke. Both sets of packings are stationary, eliminating costly cylinder wear.

SPEED REDUCER, DC-1600/3100/5300/5500/7700:
Consists of a two stage gear reduction in permanent grease for long life. All bearings are also permanently greased. It converts the high speed output of motor into very high torque to drive the pump.

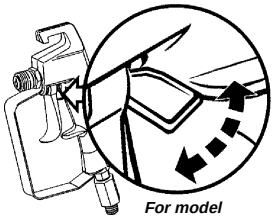

For model L-26

MOTOR (DC-1600/3100/5300/5500):
Is an industrial grade high speed unit. Its permanent magnet DC type construction withstands construction site power fluctuations. The higher rpm of this motor results in a compact and lightweight design.

MOTOR (DC-7700):
This unit has the most technologically advanced motor available today. In addition to being very compact and lightweight, it also has no brushes or commutator, and it has high torque combined with low amp draw.

PRESSURE CONTROL BOX (DC-1600/3100/5300/7700):
A rugged membrane transducer transmits a paint pressure signal to an electronic relay which then powers the motor. This on-off design has a pressure fluctuation of about 200 psi.

PRESSURE CONTROL BOX (DC-5500 & DC-7700):
A tough solid state pressure transducer combined with a state of the art variable speed electronic control provides consistant spray pressure for both the DC5500 & DC7700 sprayers. The DC7700 also features run dry protection and allowing faster priming once fluid fills the pump. The safety fuse is easy to access from the outside of the motor shell. This motor does not require any service.

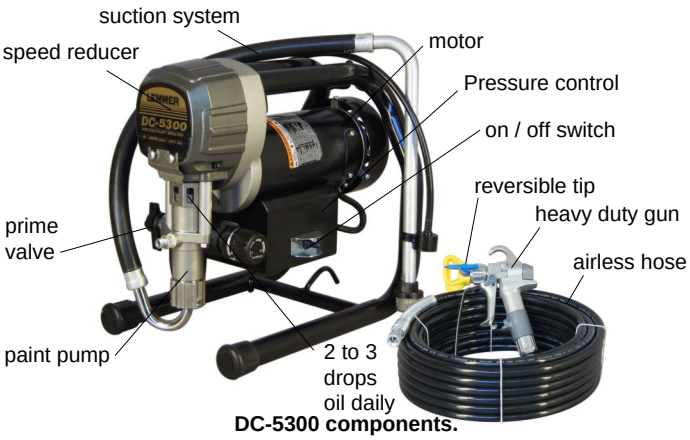

DC-5300 components.

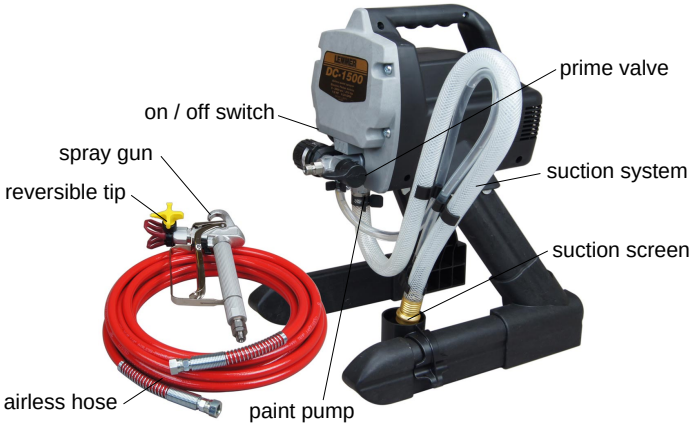

DC-1500 components.
(Latex & Oil Base only)

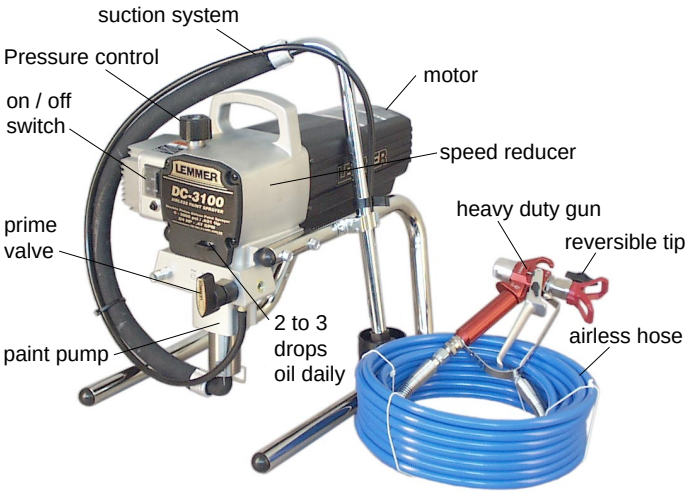

DC-3100 components.

PUMP COMPONENTS

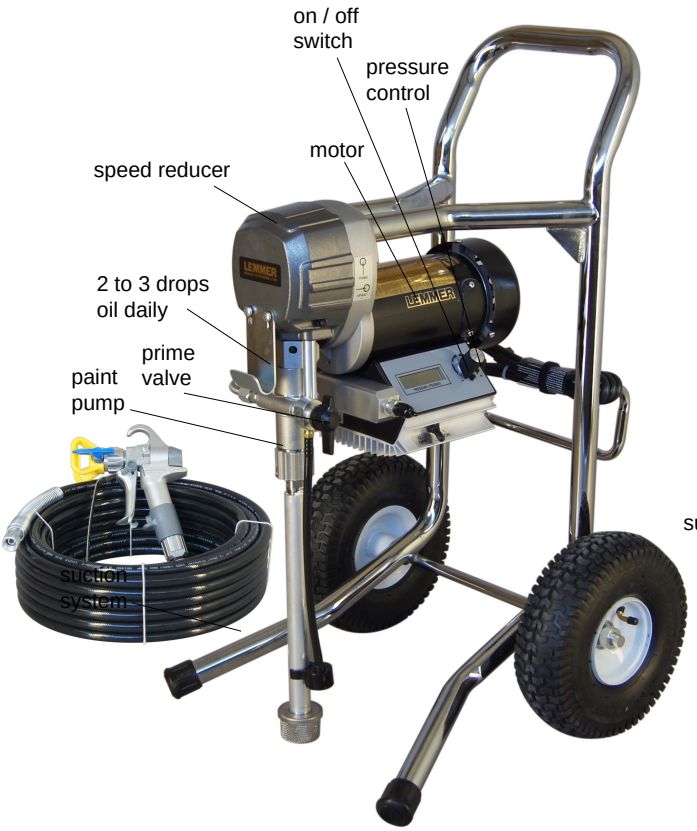

Figure 1d. - DC-5500 components.

Figure 1e. - DC-7800 components.

SETTING UP OF UNIT

TOOLS NEEDED:
2 x 8" or larger crescent wrench

PROCEDURE:
1) Remove all system components from the box for assembly.
2) Remove protective cap from outlet connection of pump.
3) Connect high pressure airless paint hose to pump outlet. Tighten to approximately 20 ft. lbs.
4) Attach the tip assembly to the spray gun.
5) Connect the paint hose to the swivel connection of the spray gun. Tighten 20 ft lbs. Ensure the gun handle is securely hand tightened to the gun.
6) Double check all connections, the unit is now ready.

Note: The pump contains a preservative oil when you receive it, that may drip from the various connections when the protective caps are removed.

WARNING: INJECTION HAZARD POSSIBLE. DO NOT SPRAY WITHOUT TIP IN PLACE. ALWAYS ENGAGE TRIGGER LOCK BEFORE REMOVING, REPLACING OR CLEANING TIP. NEVER TRY TO CLEAN THE TIP WITH YOUR FINGERS.

To disengage your trigger lock: Your spray gun is shipped from the factory with the trigger lock in the engaged position (horizontal on the L-65). To disengage, turn the trigger lock down until it is in a vertical position. To engage the trigger lock, turn it back to a horizontal position.

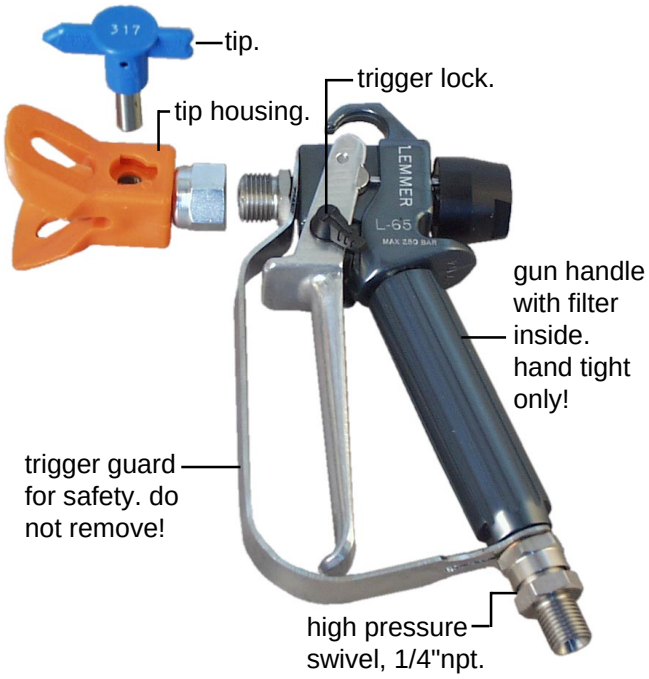

Figure 2. - L-65 gun components.

Tip Selection

Order Number Zip Tip	BB Tip	Orifice	Fan at 1'	Fan Angle	Flow Ltr/min	Tip mark
L043-091		0.009	2"	10 DEG.	0.26	109
L043-092	L038-092	0.009	4"	20 DEG.	0.26	209
L043-093	L038-093	0.009	6"	30 DEG.	0.26	309
L043-094	L038-094	0.009	8"	40 DEG.	0.26	409
L043-095	L038-095*	0.009	10"	50 DEG.	0.26	509
L043-096	L038-096*	0.009	12"	60 DEG.	0.26	609
L043-111	L038-111	0.011	2"	10 DEG.	0.4	111
L043-112	L038-112	0.011	4"	20 DEG.	0.4	211
L043-113	L038-113	0.011	6"	30 DEG.	0.4	311
L043-114	L038-114	0.011	8"	40 DEG.	0.4	411
L043-115	L038-115	0.011	10"	50 DEG.	0.4	511
L043-116	L038-116	0.011	12"	60 DEG.	0.4	611
L043-117		0.011	14"	70 DEG.	0.4	711
L043-131	L038-131	0.013	2"	10 DEG.	0.6	113
L043-132	L038-132	0.013	4"	20 DEG.	0.6	213
L043-133	L038-133	0.013	6"	30 DEG.	0.6	313
L043-134	L038-134	0.013	8"	40 DEG.	0.6	413
L043-135	L038-135	0.013	10"	50 DEG.	0.6	513
L043-136	L038-136	0.013	12"	60 DEG.	0.6	613
L043-137		0.013	14"	70 DEG.	0.6	713
L043-138		0.013	16"	80 DEG.	0.6	813
L043-151		0.015	2"	10 DEG.	0.8	115
L043-152	L038-152	0.015	4"	20 DEG.	0.8	215
L043-153	L038-153	0.015	6"	30 DEG.	0.8	315
L043-154	L038-154	0.015	8"	40 DEG.	0.8	415
L043-155	L038-155	0.015	10"	50 DEG.	0.8	515
L043-156	L038-156	0.015	12"	60 DEG.	0.8	615
L043-157		0.015	14"	70 DEG.	0.8	715
L043-171		0.017	2"	10 DEG.	1	117
L043-172	L038-172	0.017	4"	20 DEG.	1	217
L043-173	L038-173	0.017	6"	30 DEG.	1	317
L043-174	L038-174	0.017	8"	40 DEG.	1	417
L043-175	L038-175	0.017	10"	50 DEG.	1	517
L043-176	L038-176	0.017	12"	60 DEG.	1	617
L043-177		0.017	14"	70 DEG.	1	717
L043-178		0.017	16"	80 DEG.	1	817
L043-192		0.019	4"	20 DEG.	1.3	219
L043-193	L038-193	0.019	6"	30 DEG.	1.3	319
L043-194	L038-194	0.019	8"	40 DEG.	1.3	419
L043-195	L038-195	0.019	10"	50 DEG.	1.3	519
L043-196	L038-196	0.019	12"	60 DEG.	1.3	619
L043-197		0.019	14"	70 DEG.	1.3	719
L043-198		0.019	16"	80 DEG.	1.3	819
L043-213	L038-213	0.021	6"	30 DEG.	1.6	321
L043-214	L038-214	0.021	8"	40 DEG.	1.6	421
L043-215	L038-215	0.021	10"	50 DEG.	1.6	521
L043-216	L038-216	0.021	12"	60 DEG.	1.6	621
L043-217		0.021	14"	70 DEG.	1.6	721
L043-218		0.021	16"	80 DEG.	1.6	821
L043-219		0.021	18"	90 DEG.	1.6	921
L043-234	L038-234	0.023	8"	40 DEG.	1.9	423
L043-235	L038-235	0.023	10"	50 DEG.	1.9	523
L043-236		0.023	12"	60 DEG.	1.9	623
L043-237		0.023	14"	70 DEG.	1.9	723
L043-238		0.023	16"	80 DEG.	1.9	823
L043-239		0.023	18"	90 DEG.	1.9	923
L043-254		0.025	8"	40 DEG.	2.3	425
L043-255	L038-255	0.025	10"	50 DEG.	2.3	525
L043-256		0.025	12"	60 DEG.	2.3	625
L043-257		0.025	14"	70 DEG.	2.3	725
L043-258		0.025	16"	80 DEG.	2.3	825
L043-259		0.025	18"	90 DEG.	2.3	925
L043-274		0.027	8"	40 DEG.	2.7	427
L043-275	L038-275	0.027	10"	50 DEG.	2.7	527
L043-276		0.027	12"	60 DEG.	2.7	627
L043-277		0.027	14"	70 DEG.	2.7	727
L043-278		0.027	16"	80 DEG.	2.7	827
L043-279		0.027	18"	90 DEG.	2.7	927
L043-294		0.029	8"	40 DEG.	3.1	429
L043-295	L038-295	0.029	10"	50 DEG.	3.1	529
L043-296		0.029	12"	60 DEG.	3.1	629
L043-297		0.029	14"	70 DEG.	3.1	729
L043-298		0.029	16"	80 DEG.	3.1	829
L043-299		0.029	18"	90 DEG.	3.1	929
L043-313		0.031	6"	30 DEG.	3.5	331
L043-314		0.031	8"	40 DEG.	3.5	431
L043-315	L038-315	0.031	10"	50 DEG.	3.5	531
L043-316		0.031	12"	60 DEG.	3.5	631
L043-317		0.031	14"	70 DEG.	3.5	731
L043-318		0.031	16"	80 DEG.	3.5	831
N/A	L038-355	0.035	10"	50 DEG.	3.8	535

*** LTD - Limited supply, special order when stocks are low.**
Maximum volume discount allowed is 5+.

TIP SELECTION:
A standard size .017 tip will give good performance in latex or oil base materials of moderate viscosities.

The following chart gives a basic idea of what tips the Lemmer sprayers can handle performance wise and what tip is appropriate for which material. Gun filter sizing is also included in the chart for handy reference.

For a much more detailed look at tip sizes, please consult the detailed tip chart on page 10.

Tip size	Paint type	Filter size
.011	Lacquers, industrial enamel, very thin paints.	red
.013	Oil stains, pigmented lacquers, red oxide primer.	yellow
.015	Normal application of latex, oil base, stains and , solid color oil stains.	yellow
.017	Fast application of latex paints and stains, oil base paints.	white
.019	Heavier body latex paints.	white
.021	Fast application of heavier latex paint, smooth block filter when properly thinned.	white
.021	Maximum tip on DC-3100	not req'd
.025	Maximum tip on DC-4600	not req'd
.031	Maximum tip on DC-7700	not req'd
.045	Maximum tip on HP-9500	not req'd

The maximum tip for a pump is the largest tip that will deliver a proper pressure for spraying without overworking or overloading. When a tip is used for some period of time, it can wear beyond the maximum for the pump, which will cause low pressure and poor spray pattern.

Stains and thick latex products often cause the most rapid wear of the tip, while clear lacquers and varnishes cause the least wear. Thus tip life can vary from as little as 50 gallons to as much as 200 or more, depending on the product being sprayed and the pressure used.

Filters for the gun are picked not because of the type of paint being used, but to protect a given size of tip. You pick the tip for the type of paint and job being done and then choose the filter to protect that tip. The chart on page 10 gives much more detail about tip and filter choices.

THE TWO MOST IMPORTANT THINGS TO REMEMBER ABOUT TIPS.....

1) **Low pressure** means longer life, for tips and the pump. Less overspray too!

2) **Worn tips** waste paint and overwork the pump, wearing it out quickly.

ZIP TIP & BIG BARREL INFORMATION

Zip Tip Features:

Fast Tip Size Changes - no tools required.
Long Seal Life - withstands harsh solvents - won't swell or leak even with small tips - replaces in minutes.
Tip Rotates Easily - even under "high pressure" clog-up.
Venturi-Guard - less paint accumulation - helps protect against accidental injection and prevents tip from slipping out of position.
Patented Diffuser - safer unclogging in clean-out position.

Big Barrel Tip Features:

Fast Tip Size Changes - no tools required.
Versatility - Interchangeable with G big barrel tips.
Long Seal Life - withstands harsh solvents - won't swell or leak even in severe abrasives - replaces in minutes.
Replacement Seal - is included with each new tip.
Venturi-Guard - less paint accumulation - helps protect against accidental injection and prevents tip from slipping out of position.
Diffuser - safer unclogging in clean-out position.

How to Operate

To operate:

When tip plugs rotate the tip handle 180˚. Trigger the gun and line pressure will purge clog.

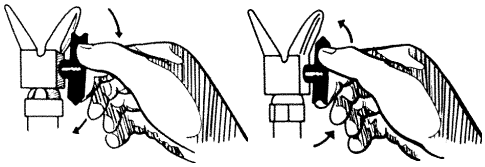

Clean Position

Spray Position

To change tips:

Rotate tip 90˚.
Remove from housing.
Install new tip.
Rotate 90˚ to spray position.

To change seal assembly:

Relieve line pressure and set gun safety.
Remove tip housing from gun.
Remove tip from housing.
Press seal assembly with gasket out of housing. (On the Zip Tip type you can use the tip as a tool for pressing).
Install tip into housing.
Lubricate and insert new seal ass'y through back of housing (press firmly to insure seal is tight against tip shaft).
Insert gasket. Install unit on gun. Tighten gun nut.

Parts Lists

Zip Tip

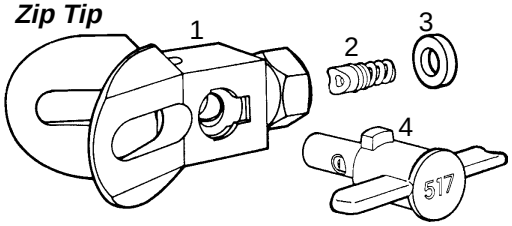

Pos.	Order #	Description
1)	L043-001	Zip Tip housing (Lemmer)
	L043-002	Zip Tip housing (Graco)
	L043-003	Zip Tip housing (Binks)
2)	L043-005	Zip Tip seal kit (includes gasket #3)
	L043-006	Spring, 3/pkg (not shown separately)
3)	L043-008	Nylon gasket
	L043-009	Tube of 8x nylon gaskets
4)	L043-***	Zip Tip - see chart

Big Barrel

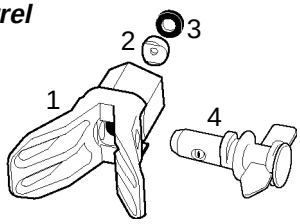

Pos.	Order #	Description
1)	L038-001	BB Tip housing (Lemmer)
	L038-002	BB Tip housing (Graco)
2)	L038-007	Metal seal
3)	L038-006	Gasket (standard)
	L038-008	Lacquer Gasket (optional)
4)	L038-***	Tip - see chart

HOW TO SELECT TIP SIZE AND PROPER FILTER

(BASIC INFORMATION)

Coating	Fan Size (measured at 1 foot) 2"	4"	6"	8"	10"	12"
Lacquer, varnish, furniture stain (viscosity of 15 to 35 seconds, similar to vegetable oil)	1-09 R	2-09 R	3-09 R	4-11 R	5-11 R	6-11 R
Industrial enamels, stain, colored lacquer (viscosity of 25 to 50 seconds, similar to dish washing liquid)	1-09 R	2-11 R	3-11 R	4-13 R	5-13 R	6-15 Y
Shop primer, solid stain, oil base, latex (viscosity of 40 to 100 seconds, similar to 10-30 motor oil)	1-11 R	2-13 Y	3-13 R	4-15 Y	5-15 Y	6-17 W
Flat oil base, latex (viscosity of 60 to 150 seconds, similar to 50 weight oil)	1-13 Y	2-15 W	3-15 Y	4-17 W	5-17 W	6-19 W
Thick latex, prepared blockfiller (viscosity of 150 to 200 seconds, similar to gear oil)	1-15 W	2-17 W	3-17 W	4-19 W	5-19 W	6-21 *
Most block fillers (viscosity of over 200 seconds, are not measurable with the Lemmer cup)	1-17 W	2-19 W	3-19 W	4-21 *	5-21 *	6-23 *

Tip chart example: Latex stain is being sprayed onto a fence. The paint is fairly thick (like a very heavy motor oil) and the DC-3100 is the spray machine. The maximum tip is a .019 for a DC-3100. Draw a line along the .019 tips as shown below. Everything above the line is sprayable with the DC-3100. Now just choose the fan width. For fences a 6" width will give a lot of control, so the intersecting best choice would be a 3-15 tip with a yellow gun filter.

explanation of tip and filter sizing: **eg:4-15 Y**
4 = half of fan width (8" @ 1 foot)
15 = orifice size in thousands of an inch (.015)
Y = **Y**ellow 100 mesh filter.
(**R = R**ed 180 mesh)
(**Y = Y**ellow 100 mesh)
(**W = W**hite 50 mesh)
(***** = *****not recommended)

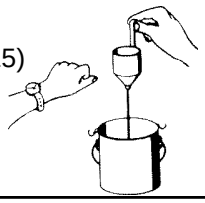

Measure the paint's viscosity as follows: (note, paints that are intended to be rolled should be thinned for air or airless spraying. A general rule of thumb is 5 to 15% for latex and oils, 30% or more for fine finishes. (consult your paint supplier for best results).
a) Submerge the Lemmer Viscosity cup in the paint.
b) Lift the cup out of the paint and begin timing.
c) Stop timing when the steady paint stream is first broken.
d) The time recorded is the paint's viscosity.

Coating	Fan Size (measured at 1 foot) 2"	4"	6"	8"	10"	12"
Lacquer, varnish, furniture stain (viscosity of 23 to 45 seconds, similar to vegetable oil)	1-09 R	2-09 R	3-09 R	4-11 R	5-11 R	6-11 R
Industrial enamels, stain, colored lacquer (viscosity of 30 to 70 seconds, similar to dish washing liquid)	1-09 R	2-11 R	3-11 R	4-13 R	5-13 R	6-15 Y
Shop primer, solid stain, oil base, latex (viscosity of 58 to 125 seconds, similar to 10-30 motor oil)	1-11 R	2-13 Y	3-13 R	4-15 Y	5-15 Y	6-17 W
Flat oil base, latex (viscosity of 80 to 180 seconds, similar to 50 weight oil)	1-13 Y	2-15 W	3-15 Y	4-17 W	5-17 W	6-19 W
Thick latex, prepared blockfiller (viscosity of 180+ seconds, similar to gear oil)	1-15 W	2-17 W	3-17 W	4-19 W	5-19 W	6-21 *
Most block fillers (viscosity of over 180 seconds, are not measurable with the Lemmer cup)	1-17 W	2-19 W	3-19 W	4-21 *	5-21 *	6-23 *

ok for DC-3000

Tip volume at various pressures.
—Gallons per minute—
Results are based on water, heavier viscosities will produce less volume. This is especially noticeable with large tips and very heavy coatings.

TIP SIZE	500 PSI	1000 PSI	1500 PSI	2000 PSI
.009	.039	.055	.067	.078
.011	.06	.08	.10	.12
.013	.09	.12	.15	.18
.015	.12	.16	.20	.23
.017	.16	.23	.27	.32
.019	.20	.27	.33	.39
.021	.24	.33	.41	.47
.023	.28	.40	.49	.57
.025	.33	.47	.58	.68
.027	.37	.52	.64	.76
.029	.47	.65	.79	.98
.031	.53	.75	.91	1.1
.035	.69	.9	1.0	1.2
.043	1.1	1.5	1.8	2.1
.053	1.5	2.2	2.9	3.4
.057	1.8	2.5	3.1	3.5
.063	2.2	3.1	3.9	4.4
.067	2.5	3.5	4.3	5.0
.073	2.9	4.1	5.1	5.9
.079	3.6	5.1	6.3	7.3
.085	3.9	5.5	6.7	7.8
.089	4.3	6.0	7.4	8.5
.099	5.3	7.5	9.2	10.6

Pump maximum tip size		
Pump	**Absolute maximum**	**To allow for tip wear**
➡DC-1500	.015	.015
➡DC-2000	.019	
➡DC-5550	.025	.023 (2X.017)
➡DC-7800	.031	.029 (2X.021)

Notes:

Approximate **wear values** comparing tungsten tips and paint type. (Paint is in gallons)				
New tip size	.015 worn to	.017 worn to	.019 worn to	.027 worn to
Tip worn to	.017	.019	.021	.029
Lacquer	400	-	-	-
Latex	75	150	250	-
Block filler	-	-	75	250
Road marking paint	2	20	50	200

The two most important things to remember about tips.....

1) **Low pressure** means longer life, for tips and the pump. Less overspray too!
2) **Worn tips** waste paint and overwork the pump, causing premature pump wear. The maximum tip for a pump is the largest tip that will deliver a proper pressure for spraying without overworking or overloading. When a tip is used for some period of time, it can wear beyond the maximum size recommended for the pump, which will cause low pressure and poor spray pattern.
   • Stains and thick latex products often cause the most rapid wear of the tip, while clear lacquers and varnishes cause the least wear. Thus tip life can vary from as little as 50 gallons to as much as 200 or more, depending on the product being sprayed and the pressure used.
   • Filter screen mesh for the gun or pump are picked not because of the type of paint being used, but to protect a given size of tip. Pick the tip for the type of paint and job being done and then choose the filter to protect that tip.

STARTUP PROCEDURE

Whenever the pump is to be used, it must be prepared for the type of paint to be used. This requires the unit to be flushed out with an appropriate solvent (water for latex, mineral spirits for oil base, etc.). Incorrect flushing can cause gumming of the valves and priming problems.

PRIME VALVE OPERATION:

1) DC-1500, DC-3100, DC-7700: Valve turns left or right. PRIME position is when the valve is turned counterclockwise (pulled out), and spray is when the valve is turned clockwise (seated in). The DC-5300 & 5500 turns 360˚ with horizontal always in the prime position.

UNIT PRIMING AND FLUSHING:

1) Check that all hose, gun handle and tip connections are tight.
2) Place trigger lock in “LOCK” position. Plug unit into correct power source.
3) Place prime valve into open or “PRIME” position.
4) Turn pressure control to minimum. Turn ON unit.
5) Place suction into container of correct solvent. Slowly, turn up the pressure control into the prime zone. Motor will begin to run, watch for flow from return tube.
6) Let pump prime for 20-30 seconds. Close prime valve. Unit will build up a low pressure and cut out.

NOTE: Always turn down pressure control before changing position of the prime valve. This reduces shock loading of the pump and possible damage.

7) Turn zip tip to halfway position and remove from gun (see page 9). Turn up pressure about 1/6 turn. This gives a good low pressure for flushing and cleaning.
8) Aim gun into empty metal pail, holding gun body against pail edge to ground gun for safety. Open trigger, and allow solvent to flow for one minute.
9) Release and lock trigger (read static safety). Turn pressure control to minimum and open prime valve to release pressure.
10) Unit is now flushed out.

PRIMING UNIT IN PAINT:

Follow same procedure as steps 1-7 of “Priming and Flushing”, but instead using paint. Then continue with the remaining steps as outlined below.

11) Remove tip from gun. Unlock trigger. Aim gun into solvent pail and hold trigger open until solvent flow changes to paint. Release and lock trigger. Re-install tip.
12) Turn up pressure approximately 1/2 to 3/4 turn from minimum setting.
13) This about 2000 psi, which is a normal spraying pressure for many medium thickness products. As the pressure you have set is reached, the motor will slow down and cut out.
14) The motor will run when the gun is open. Motor on-off cycles is in relation to both the size of the tip, and the pressure you have set. Test spray pattern per chart below, and adjust pressure accordingly.

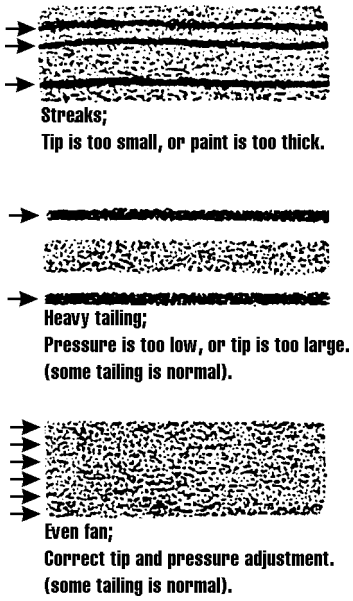

Figure 8. - Spray pattern examples.

NOTE

TO TURN UNIT OFF:

Always reduce pressure, turn prime valve to prime, trigger gun to release pressure build up in hose, and turn motor off.

HINTS FOR AIRLESS SPRAYING

WARNING: DO NOT BEGIN SPRAYING BEFORE READING THIS SECTION AND ALL PREVIOUS SAFETY INFORMATION.

PAINTING AND TIP SELECTION:
Correct adjustment of pressure and proper tip selection are crucial to the best spray pattern....

1) In any situation, the lowest pressure that gives an adequate spray pattern is the best pressure to use. It will give maximum pump and tip life and produce minimum overspray.
2) Typically, thicker materials require larger tips and higher pressures than thinner paints do. Some very thick paints may require slight thinning (5-10%) depending upon pump and tip size and application. Generally, thinning is performed when a good spray pattern cannot be obtained with an appropriate tip size at maximum pressure. (see figure 8).

SPRAY PAINTING METHOD:

1) **Keep the gun perpendicular to the surface.** Always hold the gun perpendicular to the surface with the tip approximately 12" from the surface. If held at an angle (up and down or side to side) paint will build up unevenly and leave the work splotchy. (See figure 9).

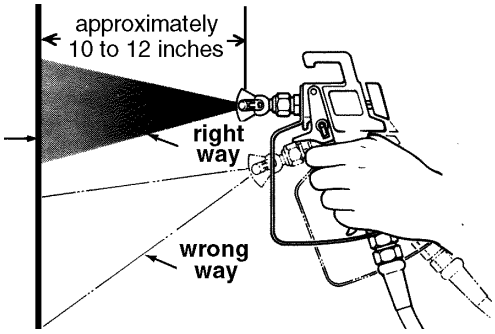

Figure 9. - Right and wrong way to hold spray gun.

2) **Move with a smooth arm stroke.** Move the gun at a steady even pace while keeping the gun perpendicular to the surface. (See figure 10) Do not move the gun by flexing your wrist. Fanning the gun will cause excessive overspray and uneven coverage. (See figure 11).

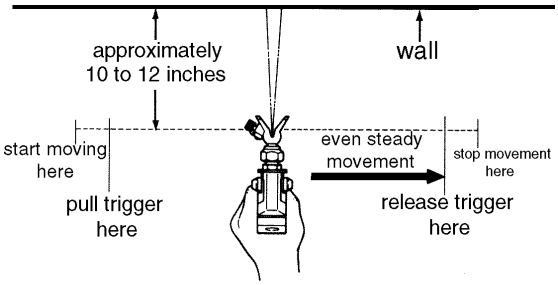

Figure 10. - Proper way to trigger spray gun.

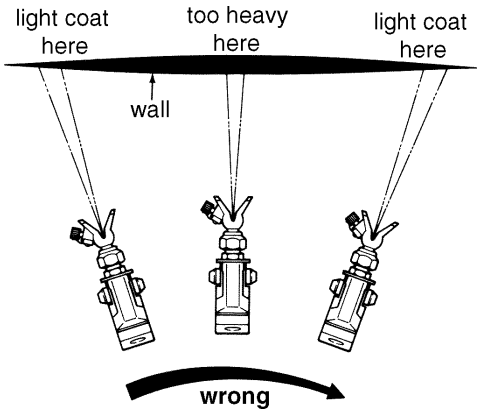

Figure 11. - Result of flexing wrist while spraying.

3) **Start moving the gun before triggering.** To get smooth overlap and prevent initial paint buildup, start your stroke movement before pulling the trigger. At the end of the stroke release the trigger before stopping. **NOTE:** To assure uniform paint coverage, overlap each stroke by 40% - 50%.
4) **Intermittent use.** If you are spraying and decide to stop for several minutes, lock the spray gun trigger and submerge the tip in a container of the appropriate solvent. This will prevent paint from hardening in the tiny spray opening and clogging the tip. Be sure to release the pressure by opening prime valve and turning the pump off.

HELPFUL HINTS FOR TROUBLE FREE PAINTING

SPRAYER:

1) Flush before each use with a solvent that is correct for the paint you will be spraying. ie: Water for latex paints.
2) Clean unit well after each use. A clean unit works better and lasts longer.
3) Flush with mineral spirits when storing the unit for more than 3 or 4 days.

PAINT:

1) Prepare paint according to manufactuer's recommendations.
2) Remove all skins on paint.
3) Stir paint thoroughly.
4) Strain paint through a fine mesh strainer bag to avoid clogging of pump and filters. (see accessories page).

SPRAY TIPS:

1) Use minimum pressure that gives a good spray pattern to reduce tip and pump wear and cut down overspray.
2) Replace tips before they become too worn. Worn tips waste paint and overwork the sprayer.

FILTERS:

1) Clean the filters after each use of sprayer.
2) Use correct filter for the tip size and paint type. See chart in manual.
3) Push down on filter after inserting it into the gun handle to test if the filter spring is at the bottom. Make sure the filter is inserted with the double lip going into the gun first.

PAINT HOSE:

1) ***INSPECT THE HOSE PERIODICALLY. DO NOT USE KINKED, WORN OR DAMAGED HOSE. SEE WARNINGS IN FRONT OF MANUAL!***
2) Use only hose that is designed for the high pressures of airless units. Minimum working pressure of 3000 PSI. Be sure it is grounded, static dissipating type hose.
3) Protect both the paint hose and the electric cord from vehicle traffic and sharp cutting edges or objects.
4) For best performance, maximum hose length is about 300 ft. of 1/4". This maximum will largely depend on tip size and thickness of paint.
5) ***DO NOT USE STEEL BRAID hose! The DC-1600, DC-3100 & DC-5500, DC-7700 can only be used with fibre braid hose.***

ELECTRICAL:

1) Always ensure the unit is plugged into a grounded outlet providing 115 volt, 15 amp (minimum), 60 cycle service.
2) Start unit with pressure control turned to minimum setting with prime valve open and pressure relieved.
3) If circuit breaker has tripped, determine the cause of overload before re-setting.

EXTENSION CORD:

1) Use only three wire, grounded type extension cord, CSA approved.
2) Use correct wire size of extension cord for correct operation. See chart on page 4.

CLEANING INSTRUCTIONS

As with all spray equipment, your sprayer must be cleaned properly or it will not operate properly. Clogged valves and filters are the most common causes of problems. If followed, these guidelines will insure trouble free performance from your sprayer.

CAUTION: Clean with water if latex is used. Clean with paint thinners for oil based paints. Both water and paint thinner will be refered to as "solvent" from here on in.

Warning: Special cleanup instructions for use with flammable solvents:
• Always flush spray gun preferably outside and at least one hose length from spray pump.
• If collecting flushed solvents in a one gallon metal container, place it into an empty five gallon container, then flush solvents.
• Area must be free of flammable vapors.

CLEAN-UP:
To get the best use and longest life from your sprayer, it is very important to clean it out properly. The procedure is simple and is very similar to the flushing procedure performed earlier. Cleaning and flushing would also be required when changing color, or type of paint, ie: latex changing to oil base.

1) Lock gun trigger, turn pressure control to minimum, open prime valve to release all system pressure.
2) Turn zip tip to halfway position and remove from gun. (if so equipped).
3) While unit is running in prime zone, with prime valve open, tilt unit back (or lift suction system out of pail) and allow it 10-15 seconds to pump out paint.

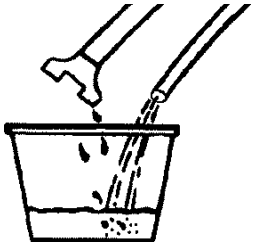

Figure 12. Pump fluid out.

4) Place suction tube in proper solvent. Clean outside of metal suction tube.

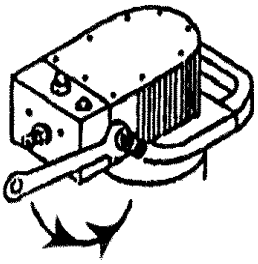

Figure 13. Clean pump with suitable solvent .

5) Turn pressure control to minimum and close prime valve.
6) Unlock trigger, and with spray tip still removed and pressure in prime zone, aim gun into paint pail and hold trigger open until paint flow stops and solvent flow just begins. Release trigger. Aim gun into solvent pail/hopper and circulate solvent for about two minutes. To reduce splashing, direct the fluid stream along inside of bucket at a side angle and well above the fluid level (or submerge the tip in the solvent). Release trigger. Point spray gun into an empty waste bucket and spray at least 1 gallon of fluid into it. (see figure 14).

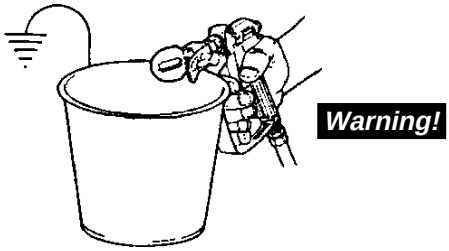

Figure 14. Pump until clean solvent appears.

Warning: conductive metal containers must be used when flushing flammable fluids through the system. Always flush at low pressure with spray tip removed. A metal part of the spray gun must be held firmly against the grounded metal pail when flushing or relieving pressure from the gun.

7) Pump solvent out by lifting both suction and return hose out of the solvent. Turn pressure control to minimum and open prime valve to release system pressure. Lock trigger and cleanspray tip before re-installing on gun.

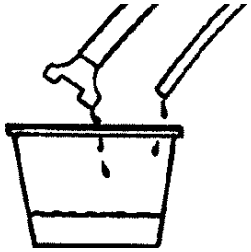

Figure 15. Fluid is pumped out.

8) Follow above steps 1-7 using clean solvent to completely flush unit.
9) If changing paint types, ie: latex (water base) to oil base, you would have to flush unit with clean mineral spirits using above steps 1-7. This would prepare the pump for the oil base paint. Water would have to be used as a last flush if changing from oil base paints to latex.
10) Ensure pressure control is turned to minimum and all pressure is released. Open prime valve. Turn pump OFF.
11) Unthread gun handle from gun body to access gun filter. Remove filter and brush clean with appropriate solvent. Inspect filter for pinholes, plugging, or other damage. Replace if required. Re-install with “double lip” end pointing up into gun. Lightly grease handle threads (petroleum jelly, auto grease) and re-install firm hand tight. Brush exterior of gun clean.
12) Remove intake screen on metal suction tube and brush clean, re-install.
13) Storing unit for more than 3 days. If unit was cleaned with an oily paint thinner such as varsol, the unit is now ready for storage (after step 14). If unit was cleaned with water or a strong thinner (ie. lacquer thinner) pump varsol (or mineral spirits) through the entire system by repeating step 8. If varsol is not available, drain all the solvent out of the hose, gun, and pump. (Tungsten carbide parts in the valves will corrode if left in water for long periods of time).
14) Coil up electrical cord and spray hose, inspecting both for signs of damage. Suggested minimum coil size for 1/4" paint hose is 18 inches.

DO NOT COIL PAINT HOSE TOO TIGHTLY. THIS MAY CAUSE KINKS, WHICH WEAKEN THE HOSE. A PAINT HOSE WITH KINKS OR OTHER DAMAGE SHOULD BE CONSIDERED UNSAFE AND BE REPLACED IMMEDIATELY.

WARNING: DO NOT CLEAN THE SPRAY GUN UNLESS THE PRESSURE HAS BEEN RELEASED FROM THE SYSTEM. SEE FRONT OF MANUAL FOR FURTHER PRECAUTIONS.

MAINTENANCE (DC-2000, DC-3100 & DC-7700)

SPRAY GUN:
The filter should be cleaned or replaced after each use to minimize tip clogging problems. If the gun valve becomes worn and begins to leak, it should be replaced. See L-65 section for overhaul details.

SPRAY TIP:
The spray tip is one of the most important elements in producing a quality spray job. It requires periodic replacement (every 50-200 gallons) to maintain performance and to prevent overworking the pump (see Tip Selection section for details).

LOWER PACKINGS:
No regular service required.
The lower packings of these units are stationary, so that the only metal wearing parts are the valves and the piston. Costly replacement of the pump cylinder is eliminated. The lower packings are self adjusting, and will generally outlast the upper packings. Both sets are included in the packing kit, and should be changed together for best reliability and performance. On the DC-7700 the lower packings can be re-thightened after every 2000 gallons of paint has been sprayed. Simply rotate the inlet valve housing 1/8 of a turn clockwise to adjust the spring tension on the packings.

UPPER PACKINGS:
Lubricate daily with 2 to 3 drops of L034-125 oil. Oiling location is shown on pages 6 & 7. The upper packings are adjusted manually, by turning the brass packing nut to the left, ie; clockwise as viewed from the top. Keep guard in place during operation.
IMPORTANT NOTE: The packings should never be over tightened, as this greatly reduces packing and piston life. Never tighten packings with pressure in unit, as a false indication of adjustment will result. A bit of gummy buildup around the packing nut is normal and should be periodically removed with a brush and solvent. This allows lubricant oil to reach packings.

NOTE: Do not adjust packing while unit is running. Fingers, tools, etc. can be trapped between plunger and packing nut. Loss of finger or serious injury could result.

TO TIGHTEN UPPER PACKINGS:
1) Turn unit off, ensure prime valve is open, and all pressure is relieved. Unplug from electrical outlet.
2) Remove all buildup from around packing nut.
3) Using a hammer and srewdriver, turn packing nut clockwise a maximum of 1/8 turn. Packings should be only tightened just enough to stop leakage. See notice above. Gentle tightening is normally sufficient.
4) Lubricate packings using L034-125 oil.
5) Replace safety shield over packing area.

NOTE: When no further adjustment of packings is possible, the nut will be difficult to turn with reasonable effort. Packings should be replaced.

CHECK VALVES:
These pumps have two valves, the footvalve at the paint inlet, and the shaft valve in the bottom of the piston. Both are of stainless steel ball, tungsten seat construction. This means that inexpensive, easily replaced balls are the normal wear point. If the unit will not draw up paint, the footvalve may be stuck. Simply tapping on the side of the footvalve with a wooden block will usually suffice. Should this not work, the following pages will show you how to remove and clean the footvalve and check the shaft valve.

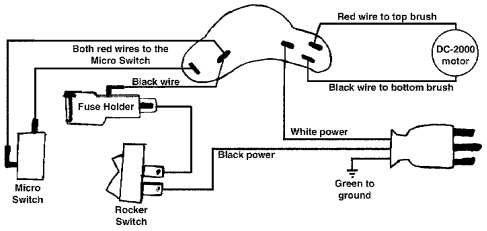

Wiring diagram, DC-2000

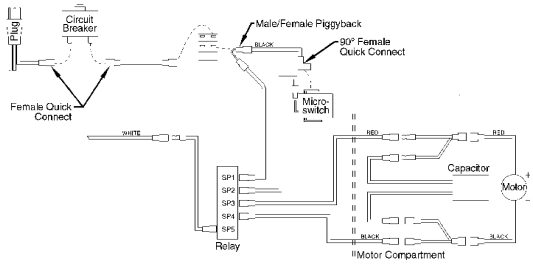

Wiring diagram, DC-3100

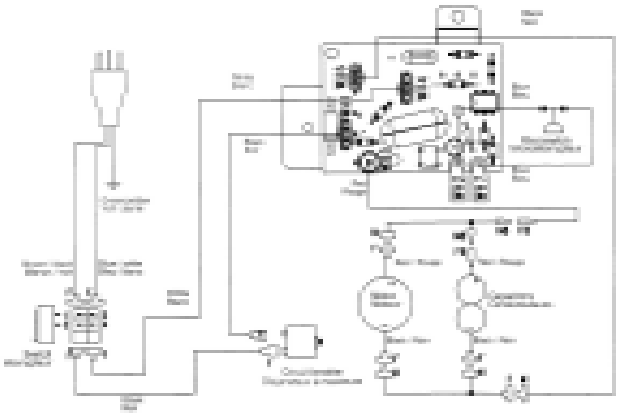
Wiring diagram, DC-3100N

SERVICE (DC-3100)

MAINTENANCE
Before proceeding, follow the Pressure Relief Procedure outlined previously in this manual. Additionally, follow all other warnings to reduce the risk of an injection injury, injury from moving parts or electric shock. Always unplug the sprayer before servicing!

GENERAL REPAIR AND SERVICE NOTES
1) Before repairing any part of the sprayer, read the instructions carefully, including all warnings. Never pull on a wire to disconnect it. Pulling on a wire could loosen the connector from the wire.
2) Test your repair before regular operation of the sprayer to be sure that the problem is corrected. If the sprayer does not operate properly, review the repair procedure to determine if everything was done correctly. Refer to the Troubleshooting section to help identify other possible problems.
3) Make sure that the service area is well ventilated in case solvents are used during cleaning. Always wear protective eyewear while servicing. Additional protective equipment may be required depending on the type of cleaning solvent. Always contact the supplier of solvents for recommendations.
4) If you have any further questions concerning your LEMMER Airless Sprayer, call one of our locations listed in the back of this manual.

REPLACING THE PRIME/SPRAY VALVE
Perform the following procedure using PRIME/SPRAY valve replacement kit P/N L045-862.
1) Drive the groove pin out of the valve handle.
2) Remove the valve handle and the cam base.
3) Using a wrench, loosen and remove the valve housing assembly from the pump manifold.
4) Make sure the gasket is in place and thread the new valve housing assembly into the pump manifold. Tighten securely with a wrench.
5) Place the cam base over the valve housing assembly.

Lubricate the cam base with grease and line up the cam with the pump manifold using the dowel pin.
6) Line up the hole on the valve stem with the hole in the valve handle.
7) Insert the groove pin into the valve handle and through the valve stem to secure the valve handle in position.

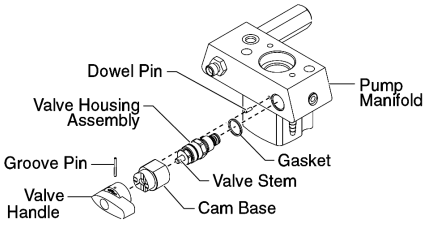

REPLACING THE PUMP FILTER

1) Loosen and remove the filter housing.
2) Pull the filter from the pump manifold.

NOTE: If the filter breaks off in the pump manifold, use a small wood screw to remove.

3) Inspect the filter seal. Based on inspection, clean or replace the seal.
4) Push the new or cleaned filter into the pump manifold.
5) Slide the filter housing over the filter and thread it into the pump manifold until secure.

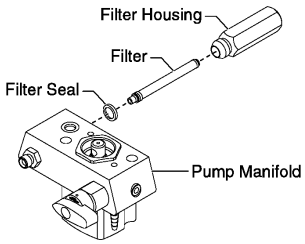

REPLACING THE MOTOR ASSEMBLY

1) Perform the Pressure Relief Procedure and unplug the sprayer.
2) Remove the four motor cover screws. Remove the motor cover.
3) Remove the four heat sink assembly screws. Pull the heat sink assembly away from the gear box housing.
4) Disconnect the five wires from the relay that is mounted on the inside of the heat sink assembly.
5) Remove the three relay mounting screws from the heat sink assembly. Remove the relay.
6) Using the three relay mounting screws, install the new relay onto the heat sink assembly. Tighten the screws securely.
7) Connect the five wires to the new relay (refer to the electrical schematic in this manual).
8) Using the four heat sink assembly screws, install the heat sink assembly onto the gear box housing. Tighten the screws securely.
9) Disconnect the black and red wires coming from the gear box housing. Disconnect the black and red wires from the capacitors. Disconnect the black and red wires from the motor.
10) Loosen and remove the four motor mounting screws.
11) Pull the motor out of the gear box housing.

NOTE: If the motor will not dislodge from the pump housing:
• Remove the front cover plate.
• Using a rubber mallet, carefully tap on the front of the motor crankshaft that extends through the slider assembly.

12) With the motor removed, inspect the gears in the gear box housing for damage or excessive wear. Replace the gears, if necessary.
13) Install the new motor into the gear box housing.

NOTE: Rotate the motor fan manually until the armature gear engages with the mating gear in the gear box housing.

14) Secure the motor with the four motor mounting screws.
15) Push the new capacitors into their clip on the new motor.
16) Reconnect the wires (refer to the electrical schematic in this manual).
17) Slide the motor cover over the motor. Secure the motor cover with the four motor cover screws.

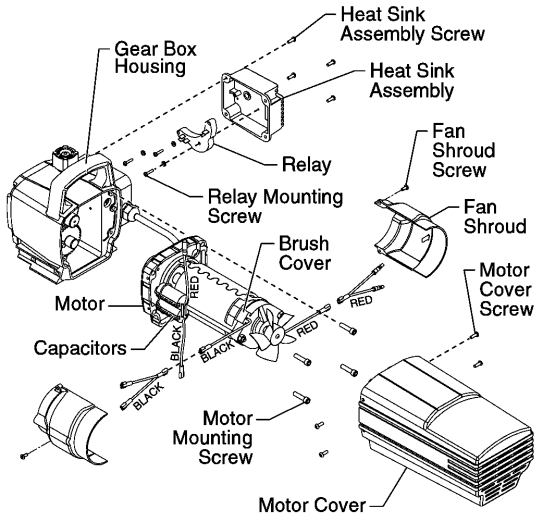

REPLACING THE MOTOR BRUSHES

Perform this procedure using Motor Brush Kit P/N L045-472.

1) Perform the Pressure Relief Procedure and unplug the sprayer.
2) Loosen and remove the four motor cover screws. Remove the motor cover.
3) Loosen and remove the two fan shroud screws. Remove the fan shroud.
4) Using a small screwdriver, pry off the two plastic brush covers.
5) Disconnect the black and red wires from the motor brushes. Remove the motor brushes.
6) Install the new motor brushes and snap on the plastic brush covers.
7) Reconnect the black and red wires from the motor brushes (refer to the electrical schematic in this manual).
8) Position the fan shroud over the motor fan. Secure the fan shroud with the two fan shroud screws.
9) Slide the motor cover over the motor. Secure the motor cover with the four motor cover screws.

REPLACING THE GEARS

1) Perform the Pressure Relief Procedure and unplug the sprayer.
2) Loosen and remove the four motor cover screws. Remove the motor cover.
3) Disconnect the black and red wires coming from the gear box housing.
4) Loosen and remove the four motor mounting screws.
5) Pull the motor out of the gear box housing.

NOTE: If the motor will not dislodge from the pump housing:
• Remove the front cover plate.
• Using a rubber mallet, carefully tap on the front of the motor crankshaft that extends through the slider assembly.

6) Inspect the armature gear on the end of the motor for damage or excessive wear. If this gear is completely worn out, replace the entire motor.
7) Remove and inspect the 2nd stage gear for damage or excessive wear. Replace if necessary.
8) Remove and inspect the crankshaft/gear assembly for damage or excessive wear. Replace if necessary.
9) Reassemble the pump by reversing the above steps. During reassembly, make sure the thrust washer is in place.

NOTE: Refill the gear box with five ounces of Lubriplate (P/N L045-479).

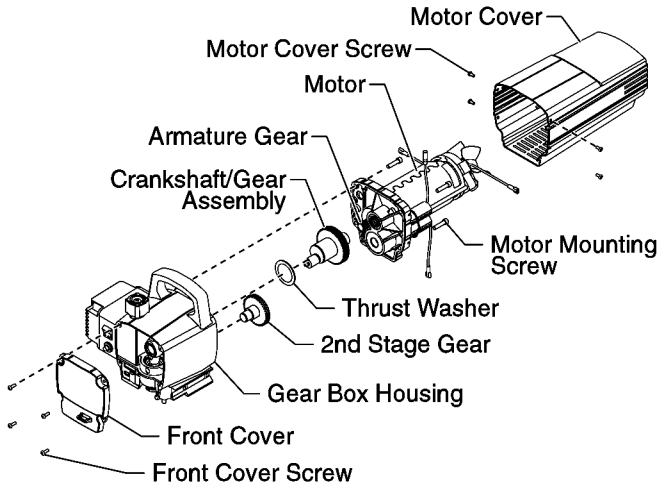

REPLACING THE TRANSDUCER

1) Loosen and remove the four front cover screws. Remove the front cover.
2) Stop the sprayer at the bottom of its stroke so that the piston is in its lowest position.
3) Perform the Pressure Relief Procedure and unplug the sprayer.

Warning: before proceeding, follow the Pressure Relief Procedure outlined previously in this manual. Additionally, follow all other warnings to reduce the risk of an injection injury, injury from moving parts or electric shock. Always unplug the sprayer before servicing!

4) Tilt the sprayer back for easy access to the fluid section.

5) Slide the retaining ring up on the slider assembly to expose the connecting pin.
6) Push the connecting pin forward through the slider assembly and piston. The connecting pin will fall into a recessed area of the gear box housing where it can be retrieved.
7) Using 3/8" a hex wrench, loosen and remove the two pump manifold mounting screws.
8) Pull the pump manifold down off of the gear box housing.
9) Using a wrench, remove the transducer assembly from the pump manifold.
10) Thread the new transducer assembly into the pump manifold. Tighten securely with a wrench.
11) Reassemble the pump by reversing steps 1-8.

Make sure the transducer is aligned properly with the hole in the pump manifold during reassembly. Improper alignment may cause damage to the transducer o-ring.

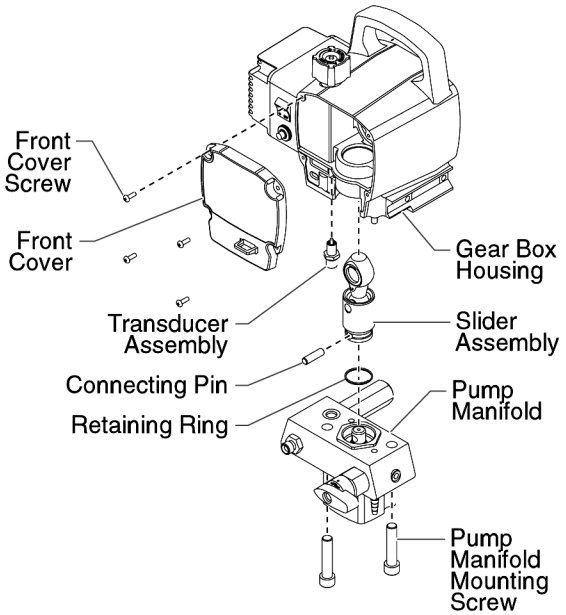

SERVICING THE FLUID SECTION

Use the following procedures to service the valves and repack the fluid section. Perform the following steps before performing any maintenance on the fluid section.

1) Loosen and remove the four front cover screws. Remove the front cover.
2) Position the slider assembly at the bottom, dead-center of its stroke so that the connecting pin and retaining ring are visible below the slider assembly. This is done by turning the sprayer on and off in short bursts until the connecting pin is visible below the slider housing.
3) Perform the Pressure Relief Procedure and unplug the sprayer.

Warning: before proceeding, follow the Pressure Relief Procedure outlined previously in this manual. Additionally, follow all other warnings to reduce the risk of an injection injury, injury from moving parts or electric shock. Always unplug the sprayer before servicing!

4) For Upright Cart units, remove the return hose from the hose clip on the siphon tube. Unscrew the siphon tube from the inlet valve housing.
5) For Low Boy cart units, remove the retaining ring from the bottom of the inlet valve housing using a snap ring pliers. Remove the return hose clamp and pull the return hose from its fitting on the pump manifold. Remove the suction set assembly.
6) Loosen and remove the high-pressure hose from the outlet fitting on pump manifold.

SERVICING THE VALVES

The design of the fluid section allows access to the inlet valve and seat as well as the outlet valve and seat without completely disassembling the fluid section. It is possible that the valves may not seat properly because of debris stuck in the foot valve seat or outlet valve seat. Use the following instructions to clean the valves and reverse or replace the seats.

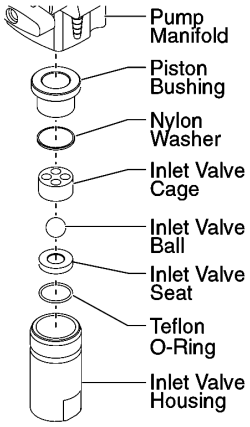

1) Using a wrench, loosen and remove the inlet valve housing from the pump manifold.
2) Clean out any debris in the inlet valve housing and examine the valve housing and seat. If the seat is damaged, reverse or replace the seat.
3) Using a 5/16" hex wrench, loosen and remove the outlet valve retainer from the piston rod.

NOTE: Always service the outlet valve with the piston rod attached to the pump. This will prevent the piston rod from rotating during disassembly of the outlet valve.

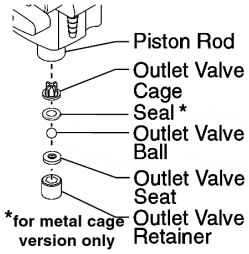

4) Clean out any debris and examine the valve housing and seat. If the seat is damaged, reverse or replace the seat.
5) Remove, clean, and inspect the outlet valve cage and outlet valve ball. Replace if they are worn or damaged.
6) Reassemble the valves by reversing the steps above. (Note: Seal only req'd on DC3100N or units with metal outlet valve cage.)

REPACKING THE FLUID SECTION

1) Remove the inlet valve assembly using the steps in the "Servicing the Valves" procedure above.

NOTE: The outlet valve does not need to be disassembled from the piston rod for this procedure.

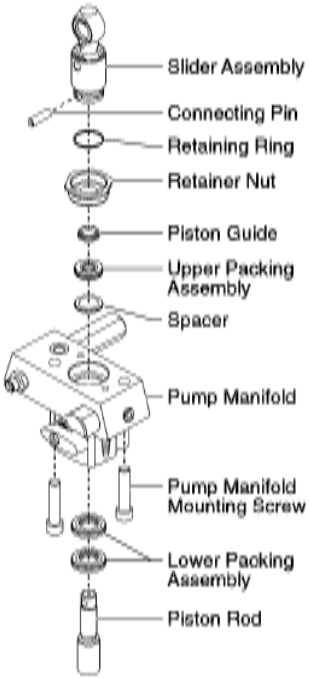

2) Slide the retaining ring up on the slider assembly to expose the connecting pin. (Step 2 & 3 not req'd on DC3100N with slotted piston.)
3) Push the connecting pin forward through the slider assembly and piston. The connecting pin will fall into a recessed area of the gear box housing where it can be retrieved.
4) Using 3/8" a hex wrench, loosen and remove the two pump manifold mounting screws.
5) Pull the pump manifold down off of the gear box housing.
6) Slide the piston rod out through the bottom of the pump manifold.
7) Loosen and remove the retainer nut and piston guide from the pump manifold.
8) Remove the upper and lower packings from the pump manifold.
9) Clean the pump manifold and install the new upper and lower packings. Refer to the illustration below for proper packing orientation.

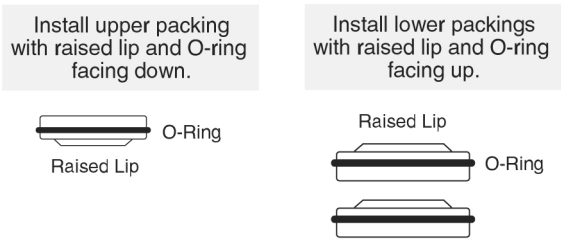

10) Inspect the piston rod for wear and replace if necessary.
11) Insert the piston guide into the retainer nut. Thread the retainer nut into the pump manifold until it is hand tight.

SERVICE (DC-3100)

12) Slide the piston guide tool (included in the repacking kit) over the top of the piston rod and insert the piston rod through the bottom of the pump manifold. Using a rubber mallet, tap the bottom of the piston rod lightly until the piston rod is in position in the pump manifold.

NOTE: Coat the piston guide tool and the piston rod with grease before inserting them into the pump manifold.

13) Using a wrench, tighten the retainer nut securely.
14) Position the pump block underneath the pump housing and push up until it rests against the pump housing. When the connecting pin hole on the piston rod lines up with the hole in the slider assembly, insert the connecting pin.
15) Slide the retaining ring down over the connecting pin.(not DC3100N)

Make sure the transducer is aligned properly with the hole in the pump manifold during reassembly. Improper alignment may cause damage to the transducer gasket.

16) Thread the pump manifold mounting screws through the pump manifold and into the gear box housing. Tighten securely.
17) Reassemble the inlet valve assembly into the pump manifold.
18) For Upright Cart units, thread the siphon tube into the inlet valve and tighten securely. Make sure to wrap the threads on the down tube with Teflon tape before assembly. Replace the return hose into the hose clip on the siphon tube.
19) For Low Boy cart units, insert the elbow on the suction set assembly into the bottom of the inlet valve housing. Push the retaining ring up into the groove inside the inlet valve housing to secure the suction set assembly in position. Push the return hose onto the return hose fitting on the pump manifold and secure in position with the return hose clamp.
20) Place the front cover on the gear box housing and secure in position using the four front cover screws.
21) Turn on the sprayer by following the procedure in the "Startup Procedure" section of this manual and check for leaks.

NOTE: Repacking kit P/N L045-470 is available. For best results use all parts supplied in this kit.

MAINTENANCE & SERVICE (DC-7700)

REPLACING THE MOTOR ASSEMBLY (WITH ELECTRONIC CONTROL)

WARNING: Electrostatic discharge (ESD) potential could cause damage to electronic control. B sure you are grounded when working on electronic control with electronic cover removed.

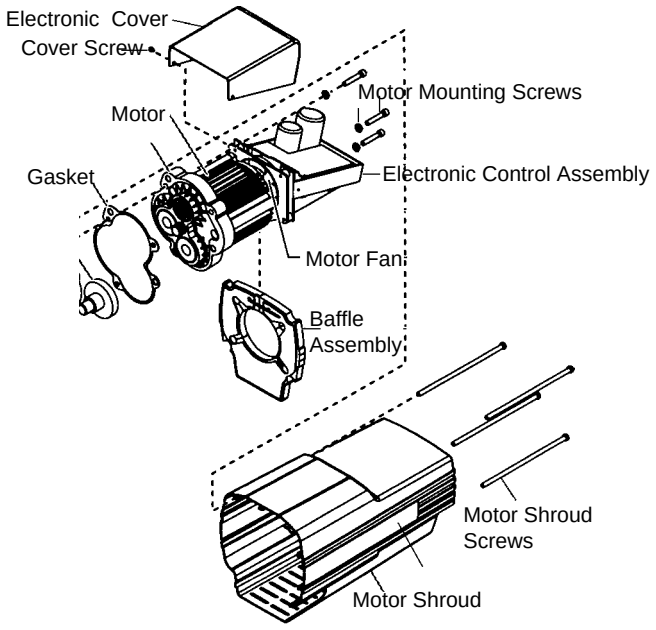

1) Perform the Pressure Relief Procedure and unplug the unit.
2) Loosen and remove the four motor shroud screws. Remove the motor shroud.
3) Release the tie wrap on the top of the baffle assembly and slip the baffle assembly down off of the motor.
4) Loosen and remove the three electronic cover screws. Lift the electronic cover off of the electronic control assembly on the motor.
5) At the electronic control assembly:
   a) Disconnect the white wire coming from the power cord and the white wire coming from the relay.
   b) Disconnect the three wires coming from the potentiometer.
6) Loosen and remove the three motor mounting screws.
7) Pull the motor out of the gearbox housing.
8) With the motor removed, inspect the gears in the gearbox housing for damage or excessive wear. Replace the gears, if necessary.
9) Install the new motor into the gearbox housing. Make sure the housing gasket is positioned properly.
10) Secure the motor with the three motor mounting screws.
11) Reconnect the wires to the electronic control assembly (refer to the electrical schematic in this section of manual).
12) Position the electronic cover over the electronic control assembly. Secure the electronic cover with the three electronic cover screws.

CAUTION: Use only Lemmer electronic cover screws to secure the electronic cover (see parts list). Use of any other screws may damage the electronic control assembly.

13) Slip the baffle assembly up and around the motor. Secure the baffle assembly with the tie wrap.
14) Slide the motor shroud over the motor.
15) Secure the motor shroud with the four motor shroud screws. Motor Shroud Electronic Cover Electronic Cover Screw - Gearbox v Housing Motor Mounting Screw Electronic Control Assembly Motor Motor Shroud Screws

REPLACING THE GEARS

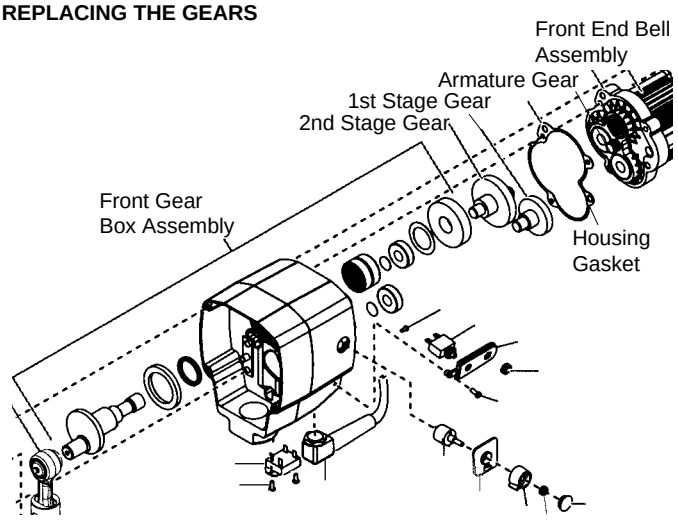

1) Perform the Pressure Relief Procedure and unplug the unit.
2) Loosen and remove the four motor shroud screws. Remove the motor shroud.
3) Release the tie wrap on the top of the baffle assembly and slip the baffle assembly down off of the motor.
4) Loosen and remove the three electronic cover screws. Lift the electronic cover off of the electronic control assembly on the motor.
5) At the electronic control assembly:
   a) Disconnect the white wire coming from the power cord and the white wire coming from the relay.
   b) Disconnect the three wires coming from the potentiometer.
6) Loosen and remove the three motor mounting screws.
7) Pull the motor out of the gearbox housing.
8) Inspect the armature gear on the end of the motor for damage or excessive wear. If this gear is completely worn out, replace the motor.
9) Remove and inspect the 1 st stage gear and 2nd stage gear assemblies for damage or excessive wear. Replace, if necessary.
10) Remove and inspect the front gear box assembly for damage or excessive wear. If damaged or worn, replace the front gear box assembly.

NOTE: Clean and refill the gear box cavity up to the rear face of each gear with wheel bearing grease.

11) Install the motor into the gearbox housing. Make sure the housing gasket is positioned properly.
12) Secure the motor with the three motor mounting screws.
13) Reconnect the wires to the electronic control assembly (refer to the electrical schematic).
14) Position the electronic cover over the electronic control assembly. Secure the electronic cover with the three electronic cover screws.
15) Slip the baffle assembly up and around the motor. Secure the baffle assembly with the tie wrap.
16) Slide the motor shroud over the motor.
17) Secure the motor shroud with the four motor shroud screws.

REPLACING THE TRANSDUCER

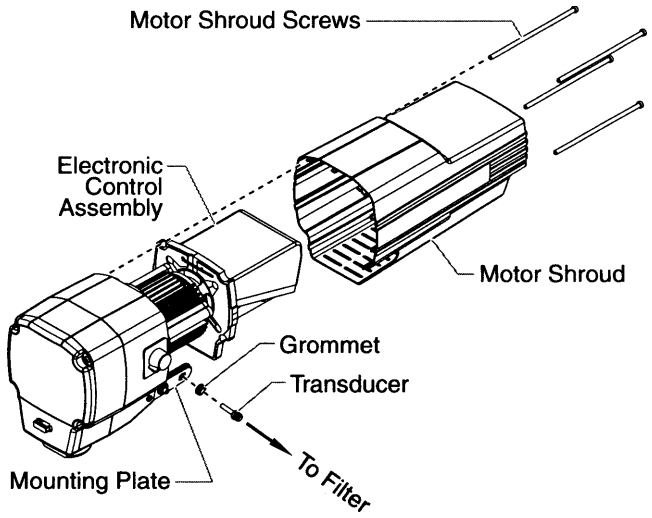

1) Perform the Pressure Relief Procedure and unplug the unit.
2) Loosen and remove the four motor shroud screws. Remove the motor shroud.
3) At the electronic control assembly, disconnect the black wire coming from the transducer.
4) Pull the grommet out of the mounting plate and slide it up the shaft of the transducer until it is clear of the mounting plate.
5) Using a wrench, loosen and remove the transducer from the filter housing. Carefully thread the transducer wire out through the mounting plate.
6) Slide the grommet off of the old transducer and onto the new transducer.
7) Thread the new transducer wire through the mounting plate and up to the electronic control assembly.
8) Thread the new transducer into the filter housing and tighten securely with a wrench.

NOTE: Make sure the o-ring on the transducer is in place before threading the transducer into the filter housing.

9) Push the grommet into the mounting plate.
10) Connect the transducer wire to the electronic control assembly (refer to the electrical schematic in this section of manual).
11) Slide the motor shroud over the motor.
12) Secure the motor shroud with the four motor shroud screws.

Use the following procedures to service the valves and repack the fluid section.

REPACKING THE FLUID SECTION (KIT # L045-890)

Use the following procedures to repack the fluid section. For best results use all parts supplied in this kit. Parts included are shown with "•".

1. Loosen and remove the four front cover screws. Remove the front cover.
2. Position the crankshaft/slider assembly at the bottom, dead-center of its stroke so that the connecting pin and retaining ring are visible below the slider assembly. This is done by turning the sprayer on and off in short bursts until the connecting pin is visible below the slider housing.
3. Perform the “Pressure Relief Procedure” in the Owner’s Manual and unplug the unit.

WARNING, Before proceeding, follow the Pressure Relief Procedure outlined in the Owner’s Manual. Additionally, follow all other warnings to reduce the risk of an injection injury, injury from moving parts or electric shock. Always unplug the sprayer before servicing!

4. Remove the return hose from the clamp on the siphon tube.
5. Unscrew the siphon tube/suction set from the inlet valve.
6. Loosen and remove the high-pressure hose from the nipple on the back of the cylinder of the fluid section.
7. Slide the retaining ring up on the slider assembly to expose the connecting pin.
8. Push the connecting pin back through the slider assembly and piston. The connecting pin will fall into a recessed area of the gear box housing where it can be retrieved.
9. Using a wrench, turn the jam nut counterclockwise to loosen it from the gear box housing.
10. Turn the fluid section counterclockwise to remove it from the gear box housing.
11. Place the fluid section cylinder upright in a vise by clamping on the wrench flats.

NOTE: Do not over-tighten the vise. Damage to the cylinder may occur.

12. Loosen and remove the inlet valve housing from the cylinder.
13. Remove the inlet valve cage, inletvalve ball, inlet valve seat, and o-ring from the inlet valve.
14. Clean out any debris in the inlet valve housing and examine the housing and the inlet valve seat. If the seat is damaged, reverse or replace the seat.

NOTE: Inlet valve replacement parts can be ordered separately.

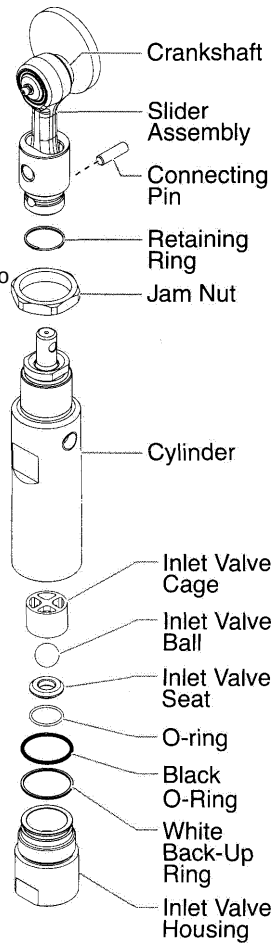

TROUBLESHOOTING

Provided you have followed the instructions, the sprayer will operate efficiently and give trouble-free service.Should any unexpected problem arise you can, in most cases, remedy the problem by following the chart below. If yo u find that you cannot correct the problem, then take the sprayer to your nearest authorized service agency. Many of the “causes” listed are unlikely to happen. However, all are included in an attempt to cover every possibility.

IT IS ABSOLUTELY ESSENTIAL FOR TROUBLE-FREE OPERATION THAT YOUR AIRLESS SPRAYER BE KEPT CLEAN AND FREE OF RESIDUAL PAINT BUILD-UP ON THE INTERNAL PARTS. IT MUST BE CLEANED AND LUBRICATED AFTER EVERY USE.

Problem	Cause	Remedy
Ia Sprayer does not start up.	1) Blown fuse or tripped circuit breaker on supply or sprayer. 2) Power cord or extension cord not properly connected.	1) Check and replace fuse or reset circuit breaker. (determine cause if possible). 2) Check and repair if necessary.
Ib Sprayer does not start up.	1) Pressure control knob set too low. 2) Clogged spray tip or filters. 3) Frozen or hardened paint in pump. 4) Worn motor brushes.	1) Turn knob to higher setting. 2) Follow Pressure Shut Down Procedure. Remove and clean spray tip and/or filter. Replace. 3) Remove and clean Fluid Section parts. Re-install. 4) Replace motor brushes.
II Sprayer starts up but does not draw up paint.	1) Prime valve closed. 2) Pump inlet screen clogged. 3) Suction tube clogged or loose. 4) Stuck or clogged foot valve or shaft valve. 5) Clogged spray tip. 6) Packings dry or worn.	1) Open prime valve. Keep valve open while pressure control knob is in prime position. Close valve after unit is primed. 2) Remove and clean inlet strainer. 3) Remove and clean suction tube, tighten. 4) Refer to maintenance section of manual. 5) Relieve pressure using the Pressure Shut Down Procedure. Remove spray tip and replace. 6) Repack Fluid Section.
III Sprayer will not maintain pressure or has low output.	1) Worn spray tip. 2) Pressure control knob loose. 3) Unit not primed. 4) Fluid leakage. 5) Spray tip too large. 6) Worn prime vavle leaking back. 7) Worn of dirty foot valve, shaft valve, or lower packings. 8) Clogged gun filter causes pump not to run after unit is primed and trigger is pulled.	1) Follow Pressure Shut Down Procedure. Replace spray tip. 2) Tighten pressure control knob set screw. 3) Follow priming procedure under Start-up section of owner’s manual. 4) Check and tighten all high-pressure fittings. 5) Follow Pressure Shut Down Procedure. Replace spray tip. 6) Replace valve. 7) Refer to re-pack section of manual 8) Follow Pressure Shut Down Procedure. Replace gun filter.
IV Upper end of fluid section leaks.	1) Upper packings worn. 2) Worn piston.	1) Follow Pressure Shut Down Procedure. Tighten packing takeup nut. If still leaking, replace packings. 2) Follow Pressure Shut Down Procedure. Replace packings first. If still leaking, replace piston.
V Poor spray pattern.	1) Spray tip too large or worn. 2) Pressure set too low. 3) Insufficient fluid delivery. 4) Paint too thick. 5) Gun filter plugged.	1) Use smaller spray tip size. 2) Increase pressure setting. 3) Follow instructions under "Unit will not maintain pressure or has low output". 4) Reduce viscosity per manufacturer’s recommendations. 5) Follow pressure shut down procedure. Remove and clean filter.
VI Spray gun won’t shut off.	1) Worn ball or seat on gun. 2) Foreign matter or paint buildup between ball and seat on gun. 3) Ball not in correct position.	1) Replace ball or seat. 2) Disassemble gun and clean. 3) Adjust rear tension nut. If this doesn’t work examine ball and replace if necessary.
VII Spray tip leaks.	1) Packing or tip is worn. 2) Gun not shutting off.	1) Replace worn or damaged parts. 2) Clean or repair as required. Check gun filter.
VIII Spray gun leaks.	1) Worn valve ball on gun.	1) Replace valve ball.
IX Spray gun won’t spray.	1) Spray tip or gun filter plugged.	1) Clean spray tip. Clean or replace gun filter.
X Low paint output from spray gun.	1) Partially plugged spray tip or filter.	1) Clean or replace gun filter. Clean spray tip.

OTHER LEMMER PRODUCTS

May 2008

LEMMER'S Full line of equipment comes with FIRST CLASS SERVICE in numerous locations across CANADA, and a FULL ONE YEAR WARRANTY. For information on choosing the right sprayer for your job, please contact your nearest LEMMER outlet.

RUSTPROOFING EQUIPMENT

Lemmer carries a wide range of pumps, spray guns and accessories for the automotive rustproofing industry.

AIRLESS ACCESSORIES

A very large assortment of hoses, guns, tips, and filters, etc. These items are universal to most airless spray equipment on the market.

AUTOMATIC GUNS

Suitable for all heavy duty airless applications. Air actuated, universal rod mounting, and standard 1/4" NPS hose connection.

PNEUMATIC PISTON PUMPS

Being an air powered airless, these units are generally used for industrial coatings. Applications range from portable lacquering to plumbed-in automatic systems. Also excellent for industry where operating conditions are very demanding.

TRANSFER PUMP

It can be used to transfer paint to remote locations, or directly to high pressure pumps. At a 1:1 ratio with up to 125 PSI air pressure it can also supply numerous air guns.

AIR GUNS & PRESSURE POTS

Conventional air spray guns for fine finishing. Suitable for countless industrial and automotive applications. Available in suction, gravity, and pressure feed versions. Each is available in many different needle sizes.

PAINTING SUNDRIES

Strainer bags, filters, pressure rollers etc. A large variety of painting accessories to help make a cleaner and more efficient working environment.

ELECTRIC PISTON PUMPS

Commercial airless sprayers for all sizes of jobs and spraying a large variety of paint types. These units are portable and come in many different performance categories. There are small units for spraying a house or barn once a year, and large units for spraying warehouses on a continuous basis.

ELECTRIC DIAPHRAGM

These sprayers are the same as above piston pumps except in a lower cost diaphragm design. The motor runs continuous for the ultimate spraying pressure control. Hopper models are easiest to clean.

HVLP TURBINE & VENTURI UNITS

High Volume Low Pressure sprayers are used for fine finishing where overspray must be kept to a minimum. The finish results are equal to or better than conventional air spray. The turbine systems are self contained and do not require an outside air source. The VENTURI spray gun only uses about 8 CFM of shop air. Applications vary from automotive finishing to commercial multi-color architectural coating.

ELECTROSTATIC UNITS

The electrostatic WRAP-A-ROUND charge makes this the best method of spraying metal with next to no overspray. Solvent and waterborne versions are available. The conversion kit will hook up to most airless pumps and we carry a completely self contained portable system.

GAS POWERED AIRLESS

These units are ready for the biggest outdoor jobs. Robust piston pump design for long life and maximum performance.

LINEMARKERS

Designed to handle the abrasive nature of road marking paint. The new DC-5500 LinePro is an all Stainless Steel piston pump designed for the new water base linestriping paints.

ACCESSORIES FOR LEMMER AIRLESS EQUIPMENT

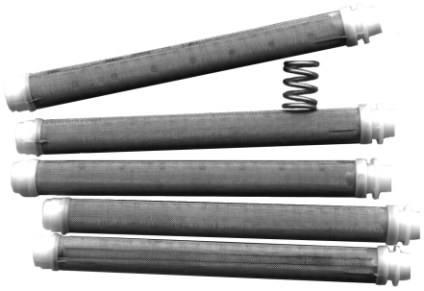

GUN FILTERS (for the L-45, L-50, & L-60)
Gun filter kit (5 X red & 1 X spring) . L032-100
Gun filter kit (5 X yellow& 1 X spg) . L032-101
Gun filter kit (5 X white& 1 X sprg) .. L032-102

FIBRE BRAID AIRLESS HOSE
1/4" X 25' Hose L031-073
1/4" X 50' Hose L031-074
3/8" X 25' Hose L031-076
3/8" X 50' Hose L031-077

HOSE CONNECTORS
1/4"m X 1/4"m L035-001
3/8"m X 3/8"m L035-002
1/4"m X 3/8"m L035-005

"SF" SUPER FINE FINISHING TIP
..... L044-***
Standard tip nut L032-501
Nylon gasket for standard tip L043-008

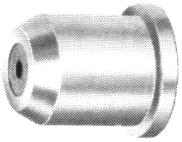

PIPE COATING "HOLLOW CONE" TIP
..... L033-5**

TIP CLEANING BROACH
Package of 12X L033-021

TIP EXTENSIONS
1/4 Meter extension with swivel L033-024
1/2 Meter extension with swivel L033-025
1 Meter extension with swivel L033-026
2 Meter extension with swivel L033-027

POLE GUNS
3' Pole gun W/O tip assembly L033-050
6' Pole gun W/O tip assembly L033-051

TELESCOPIC PRESSURE FEED ROLLER
Telescopic roller L012-002
3/8 X 12" cover L012-503
1/2 X 12" cover L012-504
3/4 X 12" cover L012-505
1-1/4 X 12" cover L012-506
End cap kit L012-508

GAUGE KIT
General use, 1/4" connections L034-104

STRAINER BAGS
1 Gallon strainer bag w/elastic L034-208
5 Gallon strainer bag w/elastic L034-209

COTTON OVERALLS & STIR RODS
Small overalls L034-220
Medium overalls L034-221
Large overalls L034-222
Extra large overalls L034-223

1 Gal stir rod (2-3/8" dia.,3/8"chuck) L034-050
1 Gal stir rod (3-1/4" dia.,3/8"chuck) L034-051
5 Gal stir rod (4-3/4" dia.,1/2"chuck) L034-052

SPRAY HOODS
Spray hoods (package of 3) L034-205

RESPIRATOR
North respirator (complete) L034-200

L-60 PARTS DIAGRAM & PARTS LIST

Mar13

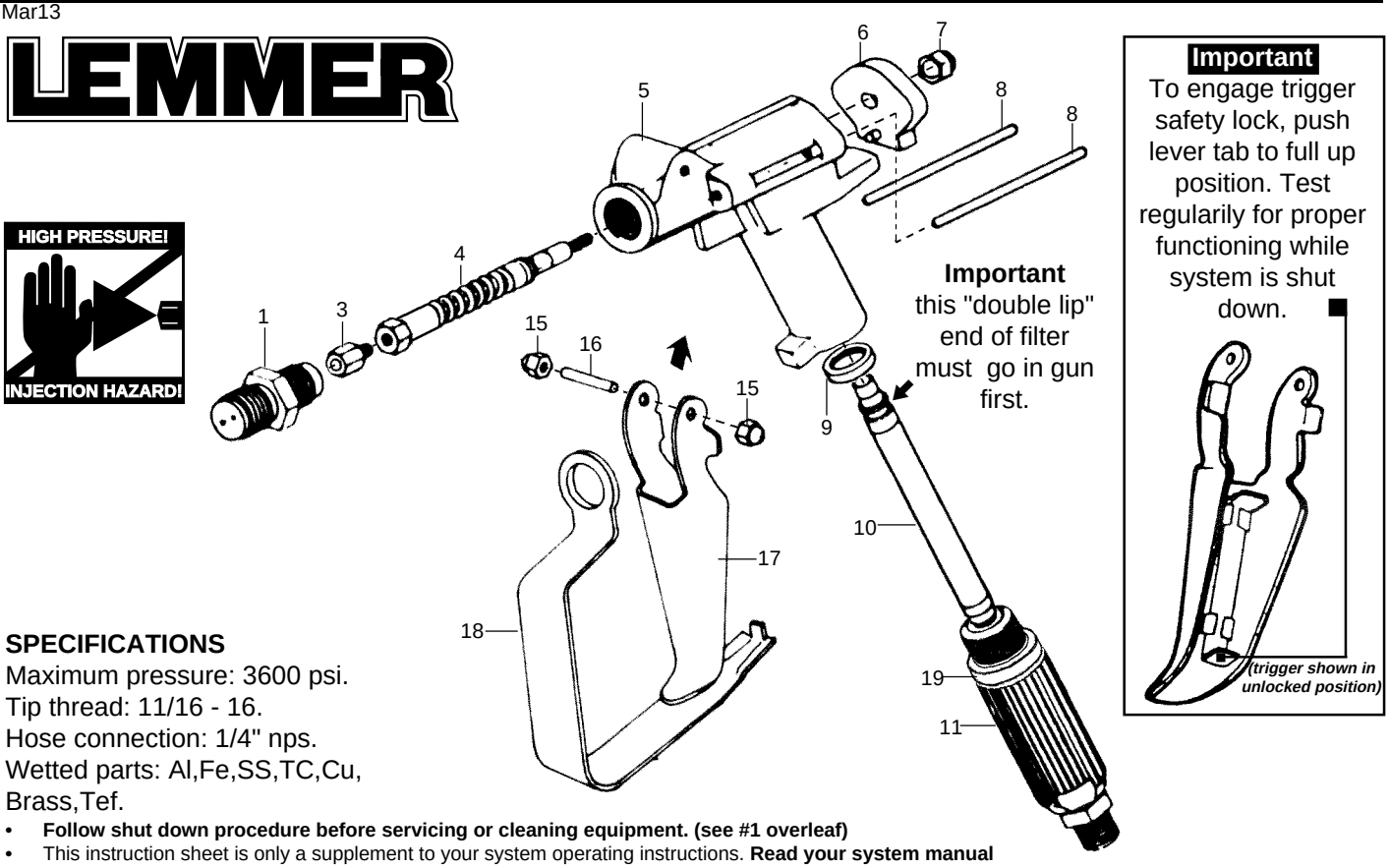

SPECIFICATIONS

Maximum pressure: 3600 psi.
Tip thread: 11/16 - 16.
Hose connection: 1/4" nps.
Wetted parts: Al,Fe,SS,TC,Cu, Brass,Tef.

- **Follow shut down procedure before servicing or cleaning equipment. (see #1 overleaf)**
- This instruction sheet is only a supplement to your system operating instructions. **Read your system manual** before operating any high pressure equipment.
- **Remove filter for cleaning**, then reinstall and hand tighten the handle.
- **To clean gun:** flush the inside by spraying proper solvent, and wipe the exterior. (It is not neccessary to disassemble gun components under normal circumstances).
- **Injection hazard**: Airless Painting Equipment can cause serious injury if the spray penetrates the skin. Do not point the gun at anyone or any part of the body. The tip guard provides some protection against accidental injection injuries, but is mostly a warning device. Never put your hand, fingers or body over the spray tip. Gloves and clothing do not necessarily offer any protection either. Keep the gun trigger safety lever in locked postion when not spraying. Always have the tip guard in place while spraying.
  In case of penetration seek medical aid immediately! *Note to physician*: Injection into skin is a serious traumatic injury. It is important to treat the injury surgically as soon as possible. Do not delay treatment to research toxicity. Toxicity is a concern with some exotic coatings injected into the bloodstream. Consultation with a plastic surgeon or reconstructive hand surgeon may be advisable. Be prepared to tell the doctor what fluid was injected.
- **Do not use halogenated hydrocarbon solvents** in this system; it contains aluminium parts and may explode. Cleaning agents, coatings, paints, and adhesives may contain halogenated hydrocarbon solvents. Don't take chances, consult your material supplier to be sure. (ex: methylene chloride and 1,1,1 - Trichlorethane)
- **Caution**: When a flammable liquid is sprayed there may be **danger of fire or explosion** especially **in a closed area.**
- **Use extreme caution when cleaning spray tip guard. DO NOT** try to wipe off build up around the spray tip before following shut down procedure. Follow the Shut down Procedure, then follow the spray tip manufacturer's instructions for removing and cleaning the spray tip.
- **Never** attempt to change spray tip or leave the unit unattended without first shutting off pump, releasing fluid pressure, and locking the trigger safety lock.
- **Conductive metal containers must be used when flushing flammable fluids** through the system. Always flush at low pressure with spray tip removed. A metal part of the spray gun must be held firmly against the grounded metal pail when flushing or relieving pressure from the gun.
- Trigger guard helps reduce the risk of accidentally triggering the gun if dropped or bumped. **Do not use a spray gun without a trigger guard.**

Pos.	Part nos.	Description	Qty.
	L032-021	***L-60 -LAirless spray gun (2 finger)***	
	L032-022	***L-60-G Airless spray gun (2 finger)***	
	L032-023	***L-60-L Airless spray gun (4 finger)***	
1	L032-650	Seat -L	1
	L032-656	Seat -G	1
3	L032-653	Ball (brass housing)	1
4	L032-679	Packing ass'y (brass body) (incl. #7nut)	1
5	L032-664	Gun body	1
6	L032-671	Retainer block	1
7	L032-673	Lock nut	1
8	L032-670	Trigger push pin with sleeve	2
9	L032-665	Handle seal	1
10	L032-516	Gun filter, white (50 mesh)	opt.
	L032-517	Gun filter, yellow (100 mesh)	1
	L032-518	Gun filter, red (200 mesh)	opt.

Pos.	Part nos.	Description	Qty.
11	L032-680	Handle with swivel (new 1pc type)	1
	L032-667	Handle only (old 2pc type) *wsl	
15	L032-676	Trigger shaft nut	2
16	L032-663	Trigger shaft ass'y (incl.pos.15 x 2)	1
17	L032-662	Trigger (2 finger)	1
	L032-654	Trigger (4 finger)	1
18	L032-651	Trigger guard (2 finger)	1
	L032-655	Trigger guard (4 finger)	1
19	L032-574	Plastic spacer, cosmetic-some models	1

Accessories:

	L032-677	Repair kit for G ver. (incl. pos. 1,3,4)
	L032-678	Repair kit for L ver. (incl. pos. 1,3,4)
	L032-678B	R-kit for L ver. (incl. pos. 1,3,4) Bedford

Specifications subject to change without notice. Jun-2010

L-60 SPRAY GUN OVERHAUL

Use diagram on opposite side for reference.

1) Initiate shut down procedure:
   Shut Down Procedure
   Always follow Shut Down Procedure before starting any troubleshooting, servicing or cleaning.
   1) Engage the trigger safety lock in the locked position. Test the trigger safety lock to ensure the lock is working properly.
   2) Turn pressure regulator to minimum.
   3) Disconnect electric plug from wall socket, or disconnect air supply.
   4) Open the dump valve to relieve pressure. Leave open until ready to spray or test or clean.
   5) Remove the spray tip.
   6) Disengage the trigger safety lock.
   7) Trigger the gun into a metal pail to relieve any remaining pressure. A metal part of the spray gun should be held firmly against the grounded metal pail when relieving the pressure from the gun. (A grounded metal pail is not required for non-flammables such as latex.)
   8) Reset the trigger safety lock to locked position.
2) Using the two crescent wrenches, disconnect the gun and gun handle from spray hose.
3) Remove spray tip or attachment assembly from gun.
4) Hold gun trigger open and remove seat (pos. 1) from gun. Release trigger. **Never remove or attach seat unless trigger is held in the open position. Permanent and expensive damage to both ball and seat will result!**
5) Remove adjusting nut (pos. 7) from rear of gun using 7/16 socket.
6) Grasp retainer block (pos. 6) and pull away from rear of gun. Remove the two trigger pins (pos. 8) from gun.
7) Gently tap on shaft that is protruding from rear of gun body. This is the end of the ball/packing assembly, and it will now pop out of the front of the gun. (pos. 3&4).
8) Remove gun handle and filter.
9) Clean all parts thoroughly (including inside of gun) and lay parts out on a clean rag for inspection.
10) If the ball (pos. 3) has a groove worn in it, the ball will have to be replaced. Usually the seat (pos. 1) will have to be replaced as well, as it wears against the ball. If the gun was leaking from the back, the packing assembly (pos. 4) will require replacement. All of these parts are included in the repair kit #L032-678.
11) Lightly grease the packing (white area of pos. 4). Push ball/packing assembly into gun body, pressing firmly until it bottoms.
    CAUTION: Push straight, as a sideways slip could bend the shaft. Rotate the ball/packing assembly so that the flat portions on the end shaft protruding from the back of the gun set horizontally.
12) Examine the trigger pins for wear and equal length. Lightly grease and install.
13) Install retainer block on rear of gun and install locking nut. Tighten locking nut until approximately one thread shows out rear of the nut.
14) Thread gun handle into gun body.
15) Lightly grease threads of seat. Install trigger guard over open end of seat. Hold gun trigger in open position and install seat. Tighten to 30-40 ft. lbs. and release trigger.
16) The retainer cap should have a bit of slack in it and should not be bottomed against the gun. The gun and safety lock will not work correctly if this step is not performed properly.
    To increase slack, loosen the locknut a little and test slack again.
    To decrease slack, tighten the locknut a little and test slack again.
    With too much slack, the gun may not turn on, but the safety lock will work fine. With too little or no slack, the gun may be permanently ON and/or the safety lock does nothing.
    DO NOT RUSH OR IGNORE THIS STEP, CORRECT OPERATION OF THE SAFETY TRIGGER LOCK REQUIRES PROPER ADJUSTMENT OF TRIGGER SLACK.
17) Install tip attachment onto gun. Remove gun handle, install the filter, lightly grease threads and re-install.
18) Place trigger in LOCK position. Install gun to hose, tightening securely. Install tip where applicable. Gun is now ready for testing and use.

DC-3100 (and most of DC-4600)

Caution: only use fibre braid high pressure airless hose. Do Not use steel braid hose!

Caution: Do Not use high pressure water spray against the electric control box.

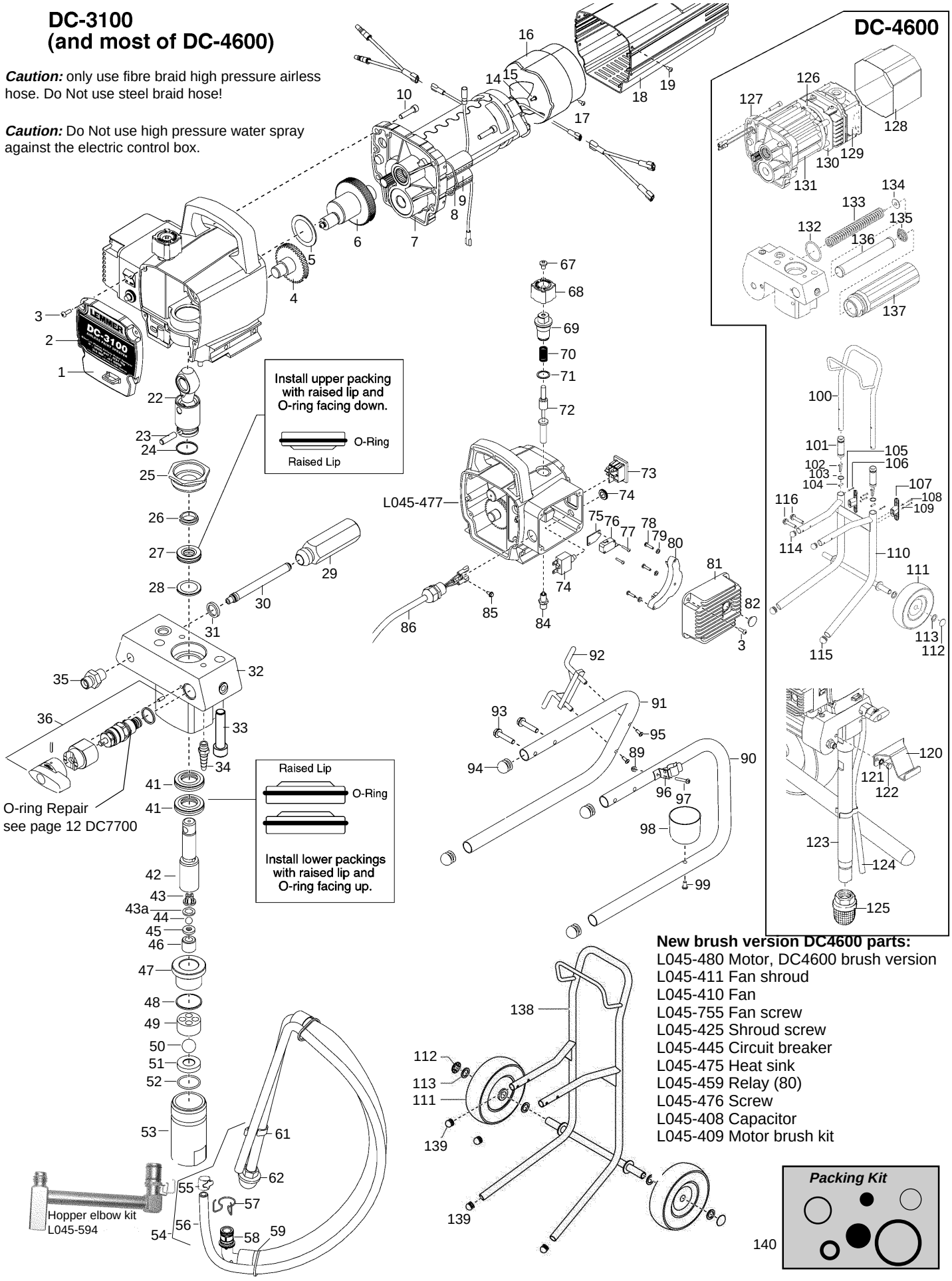

New brush version DC4600 parts:
L045-480 Motor, DC4600 brush version
L045-411 Fan shroud
L045-410 Fan
L045-755 Fan screw
L045-425 Shroud screw
L045-445 Circuit breaker
L045-475 Heat sink
L045-459 Relay (80)
L045-476 Screw
L045-408 Capacitor
L045-409 Motor brush kit

DC-3100 /DC3100N / DC-4600 PARTS LIST

Oct11

Pos.	Part nos.	Description	Qty.
	L045-010	***DC-3100 airless piston pump on stand***	
	L045-011	***DC-3100N airless piston pump on cart***	
1	L045-400	Decal, DC3100/N front cover	1
	L045-760	Decal, DC4600 front cover	1
2	L045-401	Front cover	1
3	L045-402	Screw	8
4	L045-403	Second stage gear	1
5	L045-404	Thrust washer	1
6	L045-405	Crankshaft/gear assembly	1
7	L045-406	Motor assembly (#8,9,14-17)	1
8	L013-512	Tie wrap	4
9	L045-408	Capacitor	1
10	L002-818	Bolt, 1/4 x 1" NC	
14	L045-410	Fan	1
15	L045-755	Fan screw	1
16	L045-411	Fan shroud (half)	2
17	L045-525	Screw	2
18	L045-412	Motor cover	1
19	L045-413	Screw	4
22	L045-414	Slider assembly (for piston w/pin)	1
	L045-319	Slider assembly (for slotted piston)	1
23	L045-806	Connecting pin (for piston with hole)	1
24	L045-807	Retaining ring (for slider w/pin only)	1
25	L045-415	Retainer nut	1
•26	L045-416	Piston guide	1
•27	L045-417	Upper packing	1
•28	L045-418	Spacer	1
29	L045-419	Filter housing	1
30	L032-516	Filter	1
31	L032-514	Filter seal	1
32	L045-422	Pump manifold, DC31	1
	L045-493	Pump manifold, DC46	1
33	L045-423	Bolt	2
34	L035-714	Return hose fittiing, 1/8"	1
35	L045-425	Outlet fitting, 1/4"	1
36	L045-862	PRIME/SPRAY valve assembly	1
•41	L045-426	Lower packing set (pack of 2)	1
42	L045-427	Piston rod, with pin-hole	1
	L045-316	Piston rod, slotted (DC3100N)	1
43	L045-567	Shaft valve cage (plastic-older)	1
•	L045-317	Shaft valve cage (metal, must use seal)	1
•43a	L045-318	Seal, shaft valve (for metal cage only)	1
•44	L060-519	Shaft valve ball	1
45	L060-520	Shaft valve seat	1
46	L045-428	Shaft valve retainer	1
47	L045-429	Piston bushing	1
•48	L045-430	Nylon washer	1
49	L045-431	Inlet valve cage	1
•50	L045-432	Inlet valve ball	1
51	L045-433	Inlet valve seat	1
•52	L045-434	O-ring, Teflon	1
53	L045-435	Inlet valve housing (stand)	1
	L045-436	Inlet valve housing (cart)	1
54	L045-437	Suction set assembly	1
55	L045-752	Return hose clamp	1
56	L045-438	Return hose	1
57	L045-592	Retaining ring	1
58	L045-584	O-ring	2
59	L013-512	Tie wrap	2
61	L045-581	Hose clip	1
62	L045-579	Inlet screen, 16 mesh	1
	L045-593	Inlet screen, 12 mesh	opt
67	L045-441	Screw	1
68	L045-442	Pressure control knob	1
69	L045-443	Knob housing	1
70	L045-536	Knob spring	1
71	L045-534	Washer	1
72	L045-444	Plunger	1
73	L045-712	ON/OFF switch	1
74	L045-445	Circuit breaker (DC31)	1
75	L045-446	Microswitch insulator	1
76	L045-725	Microswitch	1
77	L045-559	Screw	2
78	L045-447	Screw	3
79	L045-448	Flat washer	3

Pos.	Part nos.	Description	Qty.
80	L045-521	Relay, 120V (DC3100) DC3100N is below	1
81	L045-320	Motor control ass'y (incl. #80, 82) DC3100N	1
	L045-449	Heat sink ass'y (incl. #81,82) DC31	1
	L045-492	Heat sink ass'y (incl. #81,82) DC46	1
82	L045-450	Port plug	1
84	L045-451	Transducer assembly (includes o-ring)	1
85	L045-452	Ground screw	1
86	L045-453	Power cord assembly (stand)	1
	L045-454	Power cord assembly (cart)	1
89	L045-455	Nut	1
90	L045-456	Right leg assembly (incl. #94,89,96-99)	1
91	L045-457	Left leg assembly (incl. #92,94,95)	1
92	L045-589	Cord wrap	1
93	L045-458	Screw	4
94	L045-459	Plug	4
95	L045-460	Screw	2
96	L045-461	Clip assembly	1
97	L045-462	Screw	1
98	L045-588	Drip cup	1
99	L045-463	Screw	1
100	L045-464	Handle assembly (incl. #)	1
101	L045-744	Handle sleeve	2
102	L045-743	Snap button	2
103	L045-745	Handle washer	2
104	L045-742	Pin	2
105	L045-885	Washer	6
106	L045-746	Screw	4
107	L045-482	Cord wrap	2
108	L045-483	Screw	4
109	L045-885	Washer	6
110	L045-485	Cart frame, DC46 (incl 114,115)	1
111	L045-749	Wheel	2
112	L056-583	Cap	2
113	L056-582	Spacer	4
114	L045-478	Plug, cart frame	2
115	L045-481	Plug, cart frame	2
116	L045-484	Bolt, DC46 cart	4
119	L045-883	Hose clip (cart only)	1
120	L045-465	Pail hook (DC46 cart only)	1
121	L045-466	Washer (cart only)	2
122	L045-467	Screw (cart only)	2
123	L045-468	Siphon tube (cart only)	1
124	L045-469	Return hose (cart only)	1
125	L045-860	Inlet screen (cart only)	1
126	L045-486	Motor fan, DC46	1
127	L045-487	Motor, DC46 w/front end bell	1
128	L045-488	Cover, electronic	1
129	L045-489	Electronic control assembly	1
130	L045-490	Fan shroud	1
131	L045-491	Motor, DC46 w/end bell & electronics	1
132	L045-494	Seal, DC46 filter cap	1
133	L045-495	Spring, DC46 filter	1
134	L045-496	Adapter, DC46 filter	1
135	L045-497	Spring, DC46 filter	1
136	L045-498	Filter, DC46	1
137	L045-499	Filter housing, DC46	1
138	L045-311	Cart frame, DC31	1
139	L045-312	Plug, DC31	4
	Pump packing kit:		
•140	L045-470	Packing kit (items " • ") (DC3100, DC3100N & DC4600)	
	L045-471	Lower seal insertion tool	
	Accessories:		
	L034-125	Packing lubricating oil, squeeze bottle	
	L050-621	Owner's manual	
	L045-472	Motor Brush Kit, DC31	
	L045-473	Fluid sect compl. DC31stand (#25-32,34-53)	
	L045-474	Fluid sect compl. DC46cart (#25-32,34-53)	
	L045-479	Lubriplate, 5 ounce	

DC-5550 DIAGRAM & PARTS LIST

Jan19

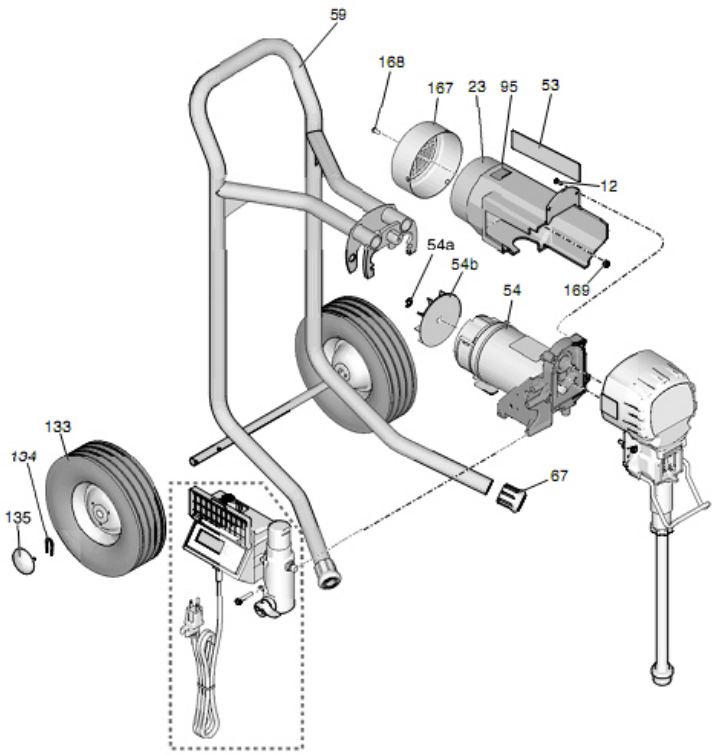

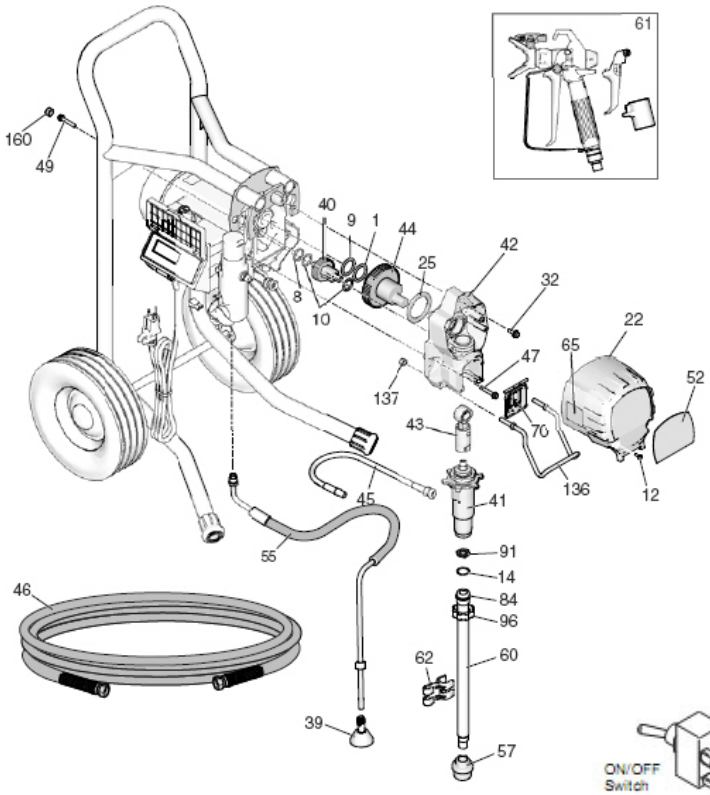

Pos.	Part nos.	Description	Qty.
	L045-019	***DC-5550 airless piston pump on cart***	
1	107434	BEARING, thrust	1
8	116073	WASHER, thrust	1
9	116074	WASHER, thrust	1
10	116079	BEARING, thrust	2
12	117501	SCREW, mach, hex washer hd	5
14	103413	O-ring	1
22	17R007	COVER, front, painted	1
23	17N272	KIT, shield, motor, incl 167,168,169	1
25	180131	BEARING, thrust	1
32	113796	SCREW, flanged, hex	1
39	241920	DEFLECTOR, threaded	1
40	249194	GEAR, reducer	1
41	17M991	PUMP, displacement, PC	1
42	17N294	HOUSING, drive, PC, includes 47	1
43	24W640	ROD, connecting, PC	1
44	24X020	GEAR, crankshaft, includes 25	1
45	15M671	HOSE, cpld	1
46	HSE1450	HOSE, cpld, 1/4 in. x 50 ft	1
47	117493	SCREW, mach, hex washer hd	4
49	115495	SCREW, mach, hex washer hd	2
52	L045-911	Front cover decal	1
53		LABEL, side	1
54	287015	MOTOR, includes 54a, 54b	1
54a	118716	RING, retaining	1
54b	248189	FAN, motor, includes 54a	1
55	244240	HOSE, drain, includes 39	1
57	187651	STRAINER, 3/4”-16	1
59	17M446	FRAME, cart	1
60	17C949	TUBE, suction, intake	
61		GUN, spray	1
62	276888	CLIP, drain line	1
65		LABEL, warning	1
67	331048	CAP, leg	2
70	17C484	COVER, pump rod	1
84	15B652	WASHER, suction	1
91	115099	WASHER, hose	1
95	15Y118	LABEL, USA	1
96	15E813	NUT, jam	1
133	106062	WHEEL	2
134	15B999	CLIP, retaining	2
135	104811	CAP, hub	2
136	17C990	HANGER, pail	1
137	111040	NUT, lock, insert, nylon	2
160	17N291	PLUG, hole, 5/8”	2
167	331786	COVER, fan	
168	136192	SCREW	
169	136217	NUT	

Accessories

	L034-129	Fluid, packing seal, 8oz.
	287735	Motor brush kit

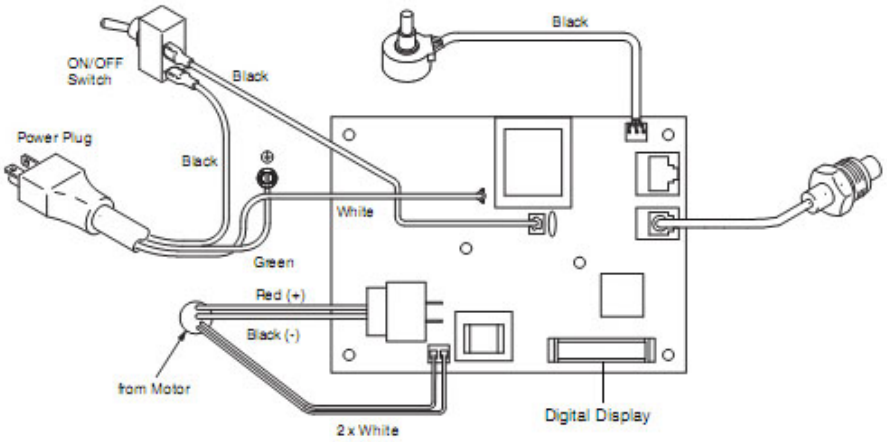

DC-5550 DIAGRAM & PARTS LIST

Jan19

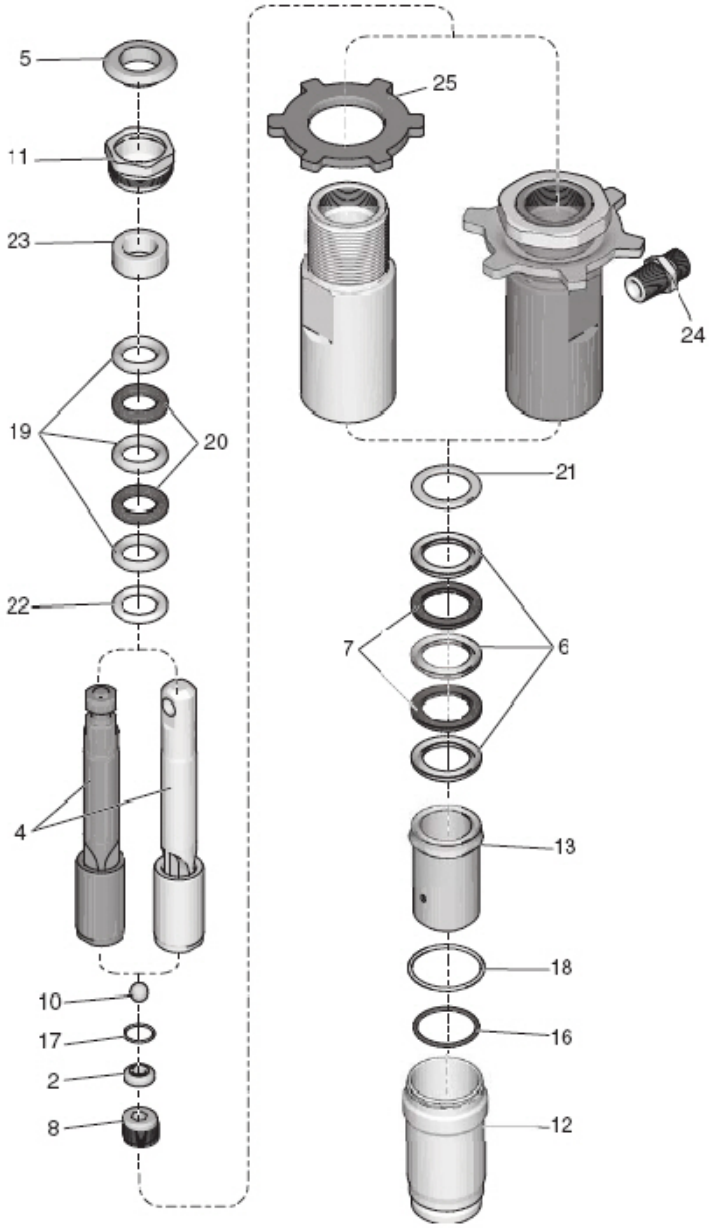

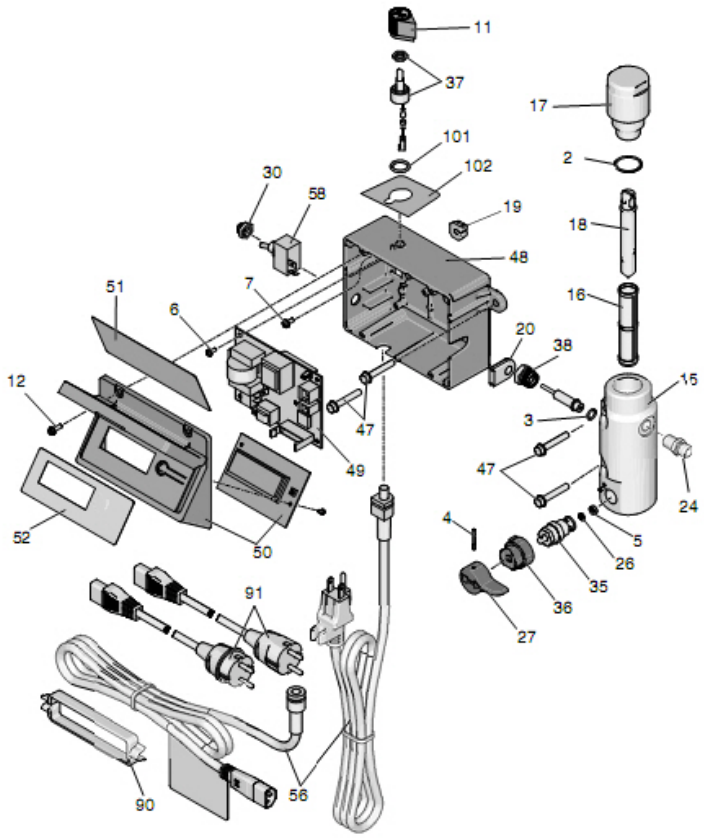

Pos.	Part nos.	Description	Qty.
2 +#	17J183	SEAT, top (piston)	1
4 +#		KIT, rod, piston	
5*	180656	PLUG, button	1
6*	17J184	V-PACKING, throat, UHMWPE	3
7*	17J185	V-PACKING, leather	2
8 +#	17J179	PLUG, seat retainer, piston	1
10*+#	105444	BALL, sst, 0.3125 in.	1
11	17J181	NUT, packing	1
12	17N465	VALVE, intake, housing	1
13*	17P097	KIT, guide, ball, assembly incl 16,18	1
16*	16D531	O-RING	1
17*+#	17J187	O-ring, special, piston seat	1
18*	17S053	O-RING	1
19*	125724	V-PACKING, piston, UHMWPE	3
20*	176755	V-PACKING, leather	2
21*	17J188	GLAND, male, piston, lower	1
22*	176754	GLAND, male, throat, upper	1
23*	176757	GLAND, female, throat	1
24	162453	Outlet fitting	
25	195150	Tightening ring	

Accessories

*	17P094	KIT, repair, pump
+	17P096	KIT, repair, piston assy, Quick Repair
#	17P095	KIT, repair, piston rod assembly

Pos.	Part nos.	Description	Qty.
2	117828	PACKING, o-ring	1
3	111457	PACKING, o-ring	1
4	111600	PIN, grooved	1
5	277364	GASKET, seat, valve	1
6	115494	SCREW, mach, Phillips, pan hd	6
7	115498	SCREW, mch, slot/hex, wash hd	1
11	116167	KNOB, potentiometer	1
12	117501	SCREW, mach, hex washer hd	4
15	15G455	MANIFOLD, fluid	1
16	17P314	30 mesh	
	17P315	60 mesh, original	
	17P316	100 mesh	
17	287902	CAP, manifold, includes 18	1
18	15B071	INSERT, filter	1
19	15B118	BUSHING, motor wire	1
20	15B120	GROMMET, transducer	1
24	162453	NIPPLE, (1/4 npsm x 1/4 npt)	1
26	15E022	SEAT, valve	1
27	187625	HANDLE, valve, drain	1
30	195428	BOOT, toggle	1
35	239914	VALVE, drain, includes 5, 26	1
36	224807	BASE, valve	1
37	17D888	POTENTIOMETER, assembly	1
38	243222	TRANSDUCER, pressure control, incl3	1
47	117493	SCREW, mach, hex washer hd	4
48	276868	BOX, control	1
49	246379	CONTROL, board	1
50	17N274	DIGITAL, display includes 51, 52	2
51	17M694	LABEL, control	1
52	17M698	LABEL, control, display	1
56	15J743	CORD, 120V	
58	195429	SWITCH, toggle	1
90	195551	RETAINER, adapter (some models)	1
101	158674	O-ring, packing	1
102	17P738	LABEL, control	1

DC-7700 PARTS DIAGRAM

Jan11

Stacked Packing DC7700 has black HP filter, and is older version
Mono Packing DC7700 has silver HP filter, and is newest version

Important, following items require accurate torques:

#46 packing nut ..... 25 ft/lbs
#67 S.V. hex nut ..... blue locktite & 12 ft/lbs
#76 inlet housing ..... snug + 1/4 turn

Parts for remote suction

1x L036-017 - Connector 3/4" x 1"
1x L035-584 - Elbow 90˚ 3/4" F
1x L035-734 - Coupler 1" Hose x 3/4" M
-- or --
1x L035-733 - Coupler 3/4" Hose x 3/4" M

L045-892 - Grease nipple
(1/4" 28 SAE Lt, straight)

L045-837 stacked nut can be substituted with the L045-797 mono nut plus the L045-898 spacer shown here.

new mono = 21mm high.
old stacked = 25.8 high.

Install all upper packings with peak of "V" packing pointing up.
(cutaway view)

Install upper mono packing with raised lip facing down.
Raised lip

Install all lower packings with peak of "V" packing pointing down.
(cutaway view)

Install lower mono-packing with side that has the o-ring closest to the top facing up.
Closer

For units blowing lower mono-packing/o-ring in strong solvent. Use 2x L045-294 teflon ring. Gently stretch one so it sits securely in pump cylinder above lower packing. Soften the other in very hot water, remove rubber o-ring from lower packing, then gently stretch teflon ring into groove from bevel side.

Silver coarse thread
Cap = L045-799
Base = L045-798

Black fine thread
Cap = L056-602
Base = L045-861

#86 O-ring Repair

L045-893 -install tool (required to push o-ring over ball end)
L045-868 -viton o-ring (standard)
L045-894 -teflon o-ring (hot water to install & cold to re-shrink)

Note: After every 2000 gallons of paint sprayed, tighten the inlet housing 1/8 of a turn (clockwise) to reset the spring tension on the packings.

DC7700 LP parts list. Pos 10-22 supercede to L numbers. All other parts can be found in the operators manual.

Item	Part #	Description	Quantity
1	0509555	Splash guard	1
2	0509554	Upper seal retainer	1
3	0509912	Upper packing assembly	1
4	0509505	Jam nut	1
5	0508343	Fitting, 3/8"	1
6	0509014	Cylinder	1
7	0509911	Lower packing assembly	1
8	0509511	Lower support ring	1
9	0509913	Piston	1
10	0507734	Outlet valve seal	1
11	0507452	Outlet cage	1
12	9841502	Outlet valve ball	1
13	0507454	Nylon washer	1
14	0294516	Outlet valve seat	1
15	0507733	Outlet valve retainer	1
16	0507729	Inlet cage	1
17	51519	Inlet valve ball	1
18	00310	Inlet valve seat	1
19	00203	O-ring, Teflon	1
20	0507730	Viton o-ring	1
21	0507731	Back-up ring, Teflon	1
22	0507728	Foot valve	1
23	0509135	Piston assembly (includes items 9–15)	1
	0509510	Repacking kit (includes items 3, 7, 10,12, 13, 17, 19, 20, and 21)	
	0509927	Lowerpackinginsertiontool	

Caution: Only use fibre braid high pressure airless hose. Do Not use steel braid hose! Min tip 0.015", min hose 50' x 3/8" or 100' x 1/4".

Caution: Do Not use high pressure water spray against the electric control box.

130

Packing Kit

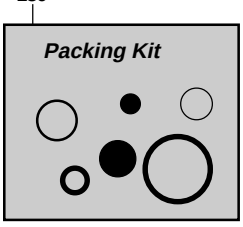

DC-7700 PARTS LIST

Feb12

Pos.	Part nos.	Description	Qty.
	L045-005	***DC-7700 Airless piston pump on cart***	
1	L045-800	Decal, DC-7700	1
2	L045-801	Front cover	1
3	L045-802	Screw	4
4	L045-803	Screw	4
5	L045-804	Slider housing	1
6	L045-805	Slider assembly	1
	L045-892	Grease nipple	1
7	L045-806	Connecting pin	1
8	L045-807	Retaining ring	1
11	L045-808	Front gearbox assembly	1
12	L045-809	2nd stage gear assembly	1
13	L045-810	1st stage gear assembly	1
14	L045-811	Housing gasket	1
15	L045-812	Front end bell assembly	1
16	L045-813	Motor assembly	1
17	L045-814	Screw	3
18	L045-815	Electronic cover	1
19	L045-816	Screw	3
20	L045-817	Lock washer	3
21	L045-818	Electronic control assy (old DC77)	1
	L045-895	Electronic control assy (new DC77)	1
22	L045-819	Fan assembly	1
23	L045-820	Baffle assembly	1
24	L045-821	Motor shroud w/labels	1
25	L075-277	Lemmer logo, 7.5"	2
26	L045-822	Screw	4
30	L045-823	Screw	1
31	L045-824	Circuit breaker	1
32	L045-825	Mounting plate	1
33	L045-826	Grommet	1
34	L045-827	Screw	1
35	L045-828	Potentiometer	1
36	L045-829	Potentiometer mounting plate	1
37	L045-830	Pressure control knob	1
38	L045-831	Nut	1
39	L045-832	Cap	1
40	L045-833	Power cord w/strain relief	1
	L045-715	Strain relief, DC45/77	1
41	L045-834	Relay	1
42	L045-835	Screw	2
45	L045-836	Jam nut	1
46	L045-797	Packing nut (new DC77 @21mm high)	1
	L045-837	Packing nut (old DC77 @25.8mm high)	1
•48	L045-838	Female gland	1
•49	L045-839	Upper packing ring, UHMWPE	3
•50	L045-840	Upper packing ring, leather	2
•51	L045-841	Male gland	1
•52	L045-842	Upper wave spring	1
ns	L045-898	Upper spacer (new DC77)	1
53	L045-843	Cylinder for stacked pack (old DC77)	1
	L045-903	Cylinder for mono packing (new DC77)	
54	L045-844	Outlet fitting	1
•56	L045-845	Lower wave spring	1
•57	L045-846	Male gland	1
•58	L045-847	Lower packing ring, UHMWPE	3
•59	L045-848	Lower packing ring, leather	2
60	L045-849	Lower spcr(1end"V",1end flat,oldDC77)	1
	L045-899	Lower spcr (flat both ends,new DC77)	1
61	L045-850	Piston, DC-7700	1
•62	L045-851	Ball guide seal	1
63	L045-852	Shaft valve ball guide	1
•64	L056-570	Ball, 10mm TC	1
•65	L045-853	Seat seal	1
66	L056-572	S.V. seat	1
67	L045-854	S.V. retaining nut	1
70	L045-855	Inlet valve ball guide	1
•71	L060-527	Steel ball, 19mm (3/4")	1
72	L060-529	Valve seat	1
•73	L060-531	O-ring, Teflon	1
•74	L045-856	O-ring, Viton	2
•75	L045-857	Back-up ring, Teflon	2
76	L045-858	Inlet valve housing	1
77	L045-859	Siphon tube	1
78	L045-860	Inlet screen	1
79	L045-883	Return hose clip (L035-223 also works)	1
80	L045-862	Prime/spray valve assembly	1
81	L045-863	Prime knob	1
82	L045-864	Groove pin	1
83	L045-865	Cam base	1
84	L045-866	Valve retainer	1
85	L045-867	Sprinq	1
86	L045-868	O-ring, Viton	1
87	L045-869	Valve stem	1
88	L045-870	Valve seat	1
89	L045-871	Valve housing	1
90	L045-872	O-ring, Viton	1
91	L045-873	O-ring, Teflon	1
92	L045-874	Gasket	1
93	L045-875	Dowel pin	1
94	L045-876	Transducer	1
95	L056-602	Filter cap	1
96	L060-534	Spring	1
97	L034-503	Filter, 50 mesh	1
	L034-504	Screen 100 mesh	opt
	L034-505	Screen 150 mesh	opt
	L034-506	Screen 200 mesh	opt
98	L034-507	Spacer sleeve	1
99	L034-509	O-ring, Teflon (black cap)	1
	L045-796	O-ring, Teflon (silver cap)	1
100	L036-072	Plug, 3/8"	1
101	L045-877	Outlet fitting	1
102	L036-071	Plug, 1/4"	1
103	L045-878	Fitting	1
104	L056-631	Hose, HP 3/8 x 19"	1
105	L045-879	Fitting	1
106	L045-880	Return hose	1
107	L002-714	Lock washer, 5/16	5
108	L002-781	Bolt, 5/16 nc x 1"	5
109	L045-861	Filter housing	1
110	L045-881	Handle (incl. 111-114,120,121)	1
111	L045-742	Pin	2
112	L045-882	Snap button	2
113	L045-744	Handle sleeve	2
114	L045-745	Flat washer	2
115	L056-582	Spacer	4
116	L045-884	Cart frame (incl. 117-119)	1
117	L045-750	End cap	2
118	L060-583	Rubber foot	2
119	L060-582	Bolt, 5/16-18 x 1/2	2
120	L045-746	Screw	4
121	L045-885	Washer	4
122	L045-886	Screw	4
123	L045-887	Cord wrap	2
124	L045-888	Wheel	2
125	L056-583	Hub cap	2
126	L045-889	Grommet	2
128	L045-543	Fuse holder (new DC77)	1
129	L045-897	Fuse, 15A (new DC77)	1

Pump packing kit:

•130	L045-890	Packing kit (stacked version, old DC77)	
	L045-901	Packing kit (mono version for new DC77, has dual o-ring on lwr starting mid 2010. Also fits Titan 840i, 1140i, 3411i)	

Assemblies and accessories:

	L045-891	Fluid section assembly	1

DC-1500 DIAGRAM & PARTS LIST

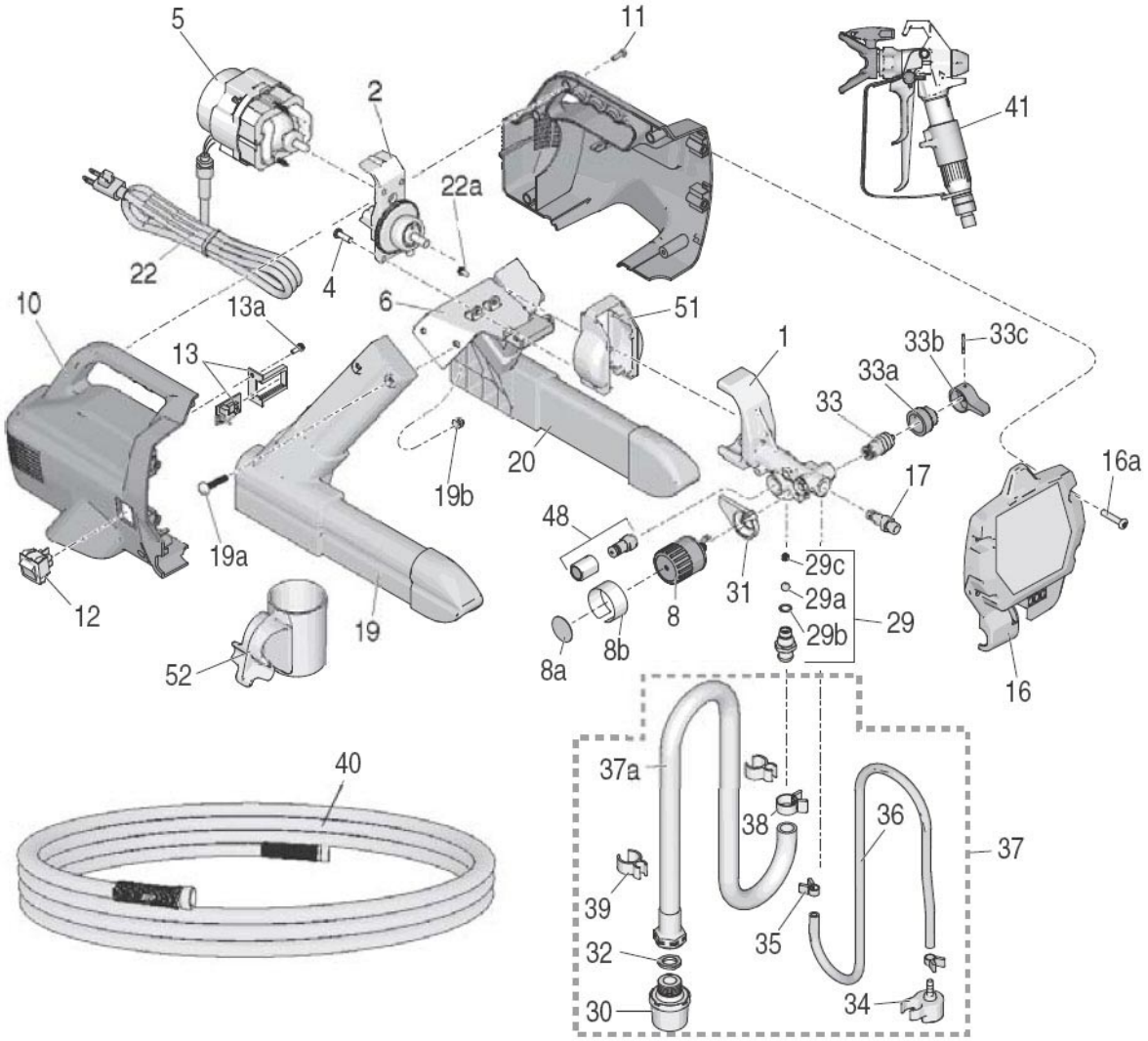

Pos.	Part nos.	Description	Qty.
	L045-007	***DC-1500 airless piston pump system***	
1	17L079	KIT pump, incl 4,8,17,29,33,48	1
2	16E835	DRIVE	1
4	112689	SCREW, button, thd form	4
5	17L282	KIT, motor	1
6	16D682	BRACKET, motor	1
8	244266	KIT, pressure control includes 8a, 8b	1
8a	15A464	LABEL, control	1
8b	16F635	LABEL, control	1
10	17K539	KIT, enclosure	1
11	115477	SCREW, mach, torx, pan hd	4
12	118899	SWITCH, rocker, spdt	1
13	17L104	KIT, control board includes 13a	1
13a	115477	SCREW, mach, torx	1
16	17K540	COVER, housing	1
	L045-950	Cover decal	1
16a	120724	SCREW	4
17	16E845	KIT, outlet valve	1
19	24K632	KIT, right leg, incl 2 screws, 19a,19b	1
19a	125116	BOLT, carriage	4
19b	102040	NUT, lock, hex	4
20	24K633	KIT, left leg, includes 2 screw,19a,19b	1
22	16E842	KIT, power cord, includes 22a, 22b	1
22a	115498	SCREW, grounding	1
22b	17K627	LABEL, warning (not shown)	1
29	16E844	KIT, pump, inlet valve incl 29a,29b,29c	1
29a	124249	BALL, intake	1
29b	103338	O-RING	1

Pos.	Part nos.	Description	Qty.
29c	123849	SPRING, inlet	1
30	288716	KIT, strainer	1
31	15Y296	COVER, wire	1
32	115099	WASHER, hose	1
33	235014	KIT, drain valve incl 33a, 33b, 33c	1
33a	24E578	BASE, valve	1
33b	187625	HANDLE, valve, drain	1
33c	111600	PIN, grooved	1
34	244035	DEFLECTOR, barbed	1
35	115489	CLAMP, drain tube	2
36	195084	TUBE, drain	1
37	24V074	KIT, suction incl 30,32,34,35,36,37a,38,39,61	1
37a	197607	TUBE, suction, includes 32	
38	116295	CLAMP, tube	1
39	195400	CLIP, spring	2
40		HOSE, 1/4 in. x 25 ft	1
41		GUN, spray	1
48	17L086	KIT, push prime	1
51	24E510	COVER, gear	1
52	17H422	CUP, inlet drip	1

Accessories

	L034-129	Fluid, packing seal, 8oz.	
	115648	VALVE, power flush (not shown)	1

NOTES

LEMMER SPRAY SYSTEMS LTD.

DISTRIBUTION CENTRES ACROSS CANADA

• SALES • SERVICE • PARTS •

www.lemmer.com

CALGARY (head office)
Lemmer Spray Systems Ltd.
4624 - 12th Street N.E. Calgary, AB, T2E 4R4
TEL: (403) 250-7735 **FAX: (403) 291-9095**

TORONTO
Lemmer Spray Systems (Ont.) Ltd.
7585 Torbram Rd, #7&8, Mississauga, ON, L4T 1H2
TEL: (905) 673-1555 **FAX: (905) 673-3201**

MONTRÉAL
Lemmer (Qué.) Inc.
2851 Bd le Corbusier, Chomedey, Laval, QC, H7L 4J5
TEL: (450) 681-8220 **FAX: (450) 681-4914**

Jan-24-19

(specifications are subject to change without notice)
(caractéristiques sont sujets à changement sans prévis)

LEMMER PAINT SPRAYING EQUIPMENT LIMITED WARRANTY

LEMMER Spray Systems Ltd. extends to the original purchaser of its paint spray equipment a limited **one year warranty** from the date of purchase against **defects in material or workmanship** provided that the equipment is installed and operated in accordance with the recommendations and instructions written in the owners manual. LEMMER Spray Systems Ltd. will **repair or replace**, at its option, defective parts without charge if such parts are returned (still intact in the original equipment) with transportation charges **prepaid** to the nearest LEMMER Spray Systems Ltd. outlet. An original **proof of purchase** must be attached.

THIS WARRANTY DOES NOT COVER:

Normal wear and/or defects caused by or related to abrasion, corrosion, abuse, negligence, accident, faulty installation or tampering in a manner which impairs normal operation.

Transportation costs and other incidental, direct, special, or consequential damages or loss.

Manual #L050-621